HYUNDAI
MOTOR GROUP

SE 2200 Series

High Speed, Rigidity and Productivity Economical CNC Turning Center

HYUNDAI WIA CNC Turning Center

HYUNDAI WIA EXPERIENCE THE NEW TECHNOLOGY

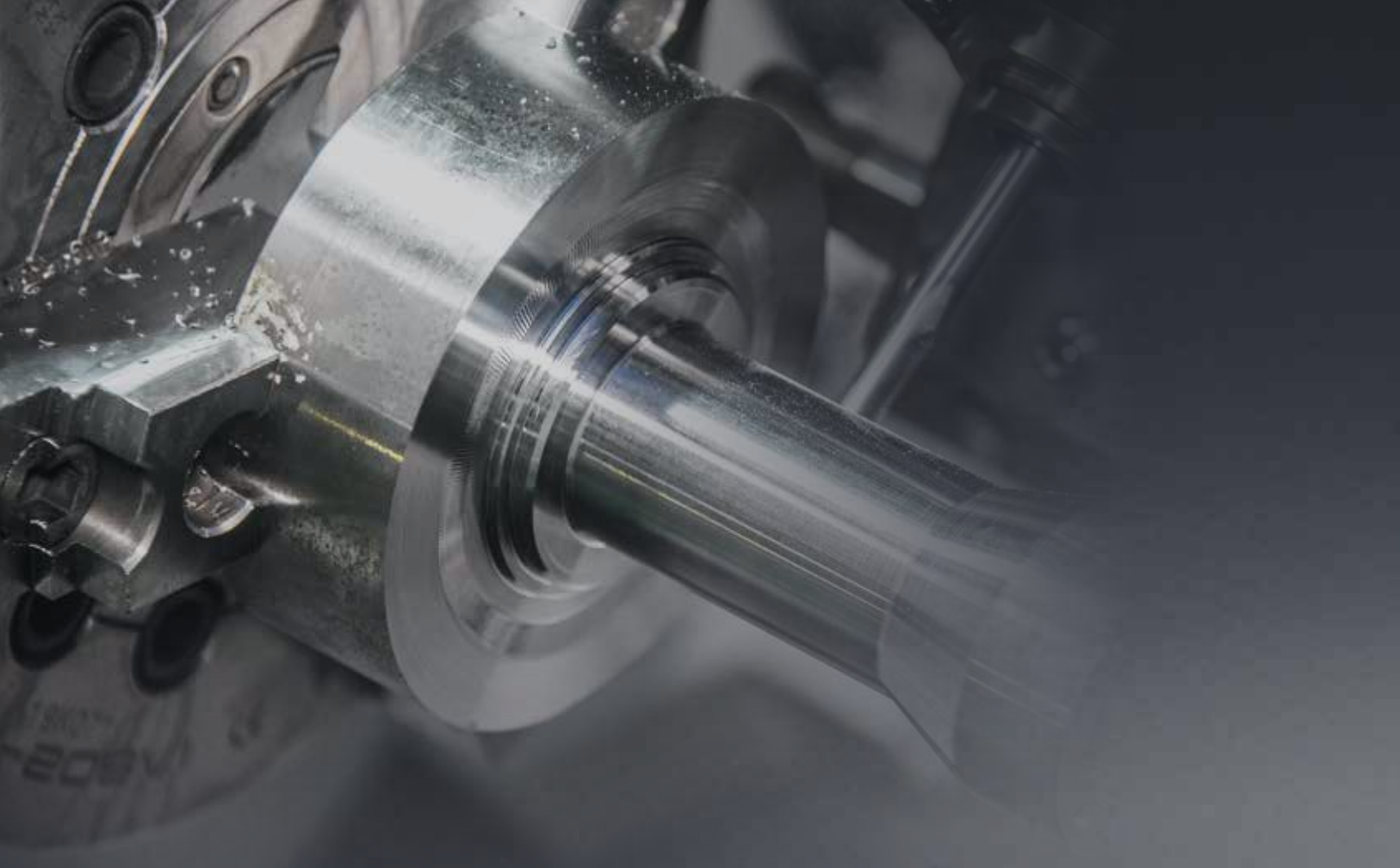

Technical Leader

The CNC Turning Center **SE Series**, designed with HYUNDAI WIA's engineering expertise to maximize productivity by enhancing rigidity and accuracy of machining.

ITEM	Main Sp.			Sub Sp.	Bed Type		Turret	
	6″	8″	10″	5″	Std. Bed	Long Bed	Std. Turret	BMT45
SE2200A	●				●		●	
SE2200LA	●					●	●	
SE2200MA	●				●			●
SE2200LMA	●					●		●
SE2200LMSA	●			●		●		●
SE2200		●			●		●	
SE2200L		●				●	●	
SE2200M		●			●			●
SE2200LM		●				●		●
SE2200LMS		●		●		●		●
SE2200LC			●			●	●	
SE2200LMC			●			●		●
SE2200LMSC			●	●		●		●

SE 2200 Series

Global-standard CNC Turning Center with High Speed, Rigidity and Productivity

- 30° slanted one-piece bed structure with high rigidity
- Ensured high-rigidity applying Roller guideway on all axes (X/Z-axis: 30/36m/min)
- Improved user convenience by applying the latest controller of FANUC
- Prepared user-oriented lineup including long-bed, mill turret and sub-spindle
- Compact structure with internal-motor design (for standard-type bed)
- Ergonomic design for convenient access to chuck and tool

HYUNDAI
WIA
SE 2200LM

APPLICATIONS & PARTS

Reduced machining time by HYUNDAI WIA's Technique

SE Series has been designed with robust box guide, spindle and travel system, maximizing precision and minimizing thermal displacement when process the products.

CARRIER PLANET

SHAFT

FLANGE

DRIVE GEAR

MACHINING CAPABILITY

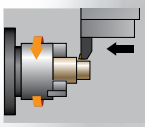

O.D Turning (Material : SM45C)	
Machining Dia.	Ø80 mm (Ø3.1")
Machining depth	4 mm (0.16")
Cutting speed	215 m/min
Spindle rpm	856 r/mim
Forwarding speed	0.5 mm/rev
Chip discharging amount	430 cc/min

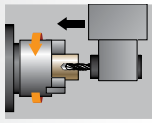

U-Drill (Material : SM45C)	
Tool Dia.	Ø60 mm (Ø2.4")
Cutting speed	190 m/min
Spindle rpm	1,011 r/mim
Forwarding speed	0.17 mm/rev
Chip discharging amount	486 cc/min

SE2200LM

❖ The above result might be different by types of processing circumstances.

01 BASIC **STRUCTURE**

The Best Productivity 6″ / 8″ / 10″ Compact CNC Turning Center

Mill Turret

- BMT45 (12 [24] Station)
- 6,000 r/min
- Collet Size : ER20 {Ø13 (Ø0.51″)}

Sub Spindle

- 5″ / 6,000 r/min
- C-Axis Control : 0.001°

High Precision Spindle

- Integral body & heat dissipating RIB structure.
- 6″ : 6,000 r/min
- 8″ : 4,500 r/min
- 10″ : 3,500 r/min
- C-Axis Control : 0.001°

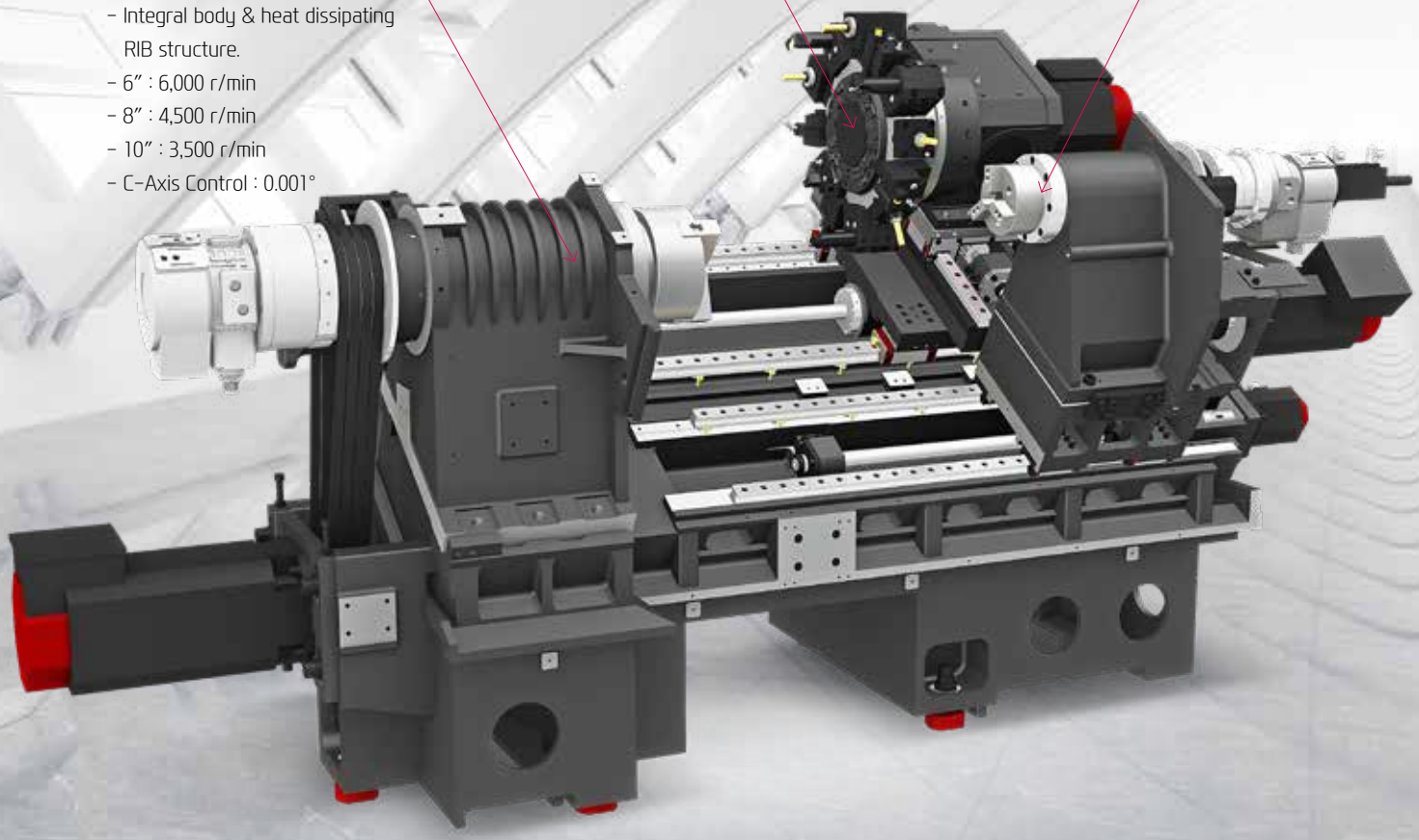

REDUCTION OF NON-CUTTING TIME BY FAST RAPID SPEED

ALL-IN-ONE TYPE OF BED

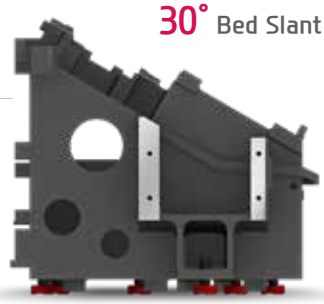

Optimal Structural Analysis

Structural analysis was applied to the design of the machine to increase the tool post body and reduce the machine's height so as to maintain the bed's dynamic rigidity even during high-speed machining. In addition, the SE Series bed slope is pitched at 30 degrees to ensure more stable machining.

ENHANCED VIBRATION ABSORPTION THANKS TO INCREASED GROUND AREA

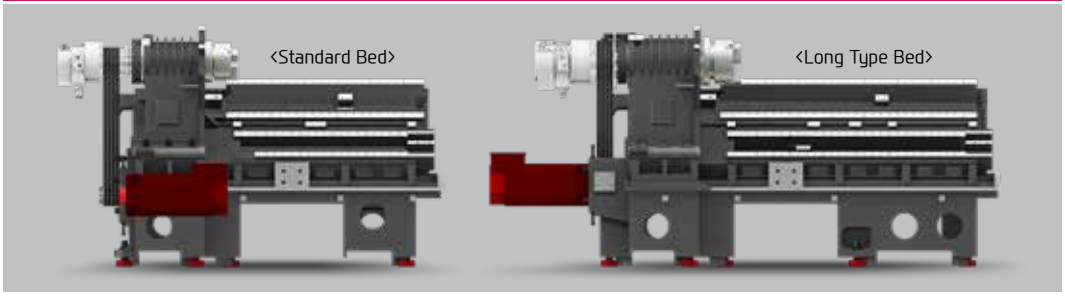

Floor Space (L×W) – Standard Bed	**Floor Space** (L×W) – Long Type Bed
2,120×1,610 mm (83.5″×63.4″)	2,970×1,610 mm (116.9″×63.4″)

GUIDEWAY

High-Speed Roller LM Guideway

Linear roller guideways are applied to reduce non-cutting time bring high rigidity.

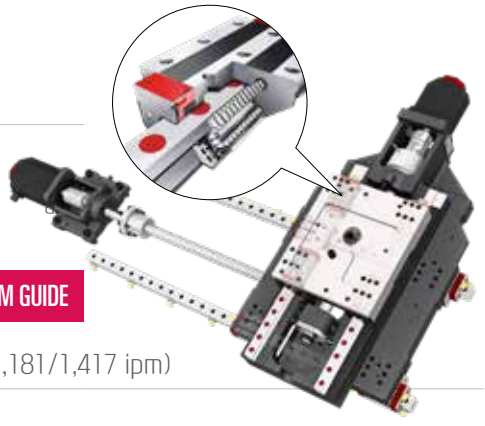

RIGIDITY HAS INCREASED 30% COMPARED TO THE BALL BEARING LM GUIDE

Rapid Traverse Rate (X/Z)	30/36 m/min (1,181/1,417 ipm)

Travel (X/Z)

Standard Bed	Long Type Bed
210/340 mm (8.3″/13.4″)	210/560 mm (8.3″/22″)

02 HIGH PRECISION SPINDLE

Long Lasting, High Accuracy & Excellent Performance CNC Turning Center

Spindle Specifications

[ ] : Option ● : Power Up

ITEM	Spindle Speed	Motor (Max./Cont.)	Torque (Max./Cont.)	Driving Method
6″ Spindle	6,000 rpm (FANUC)	15/11 kW (20/15 HP)	127/70 N·m (93.7/51.6 lbf·ft)	Belt
	[6,000 rpm (iTROL)]	[13.5/9 kW (18/12 HP)]	[114.5/76.4 N·m (84.5/56.3 lbf·ft)]	
8″ Spindle	4,500 rpm (FANUC)	15/11 kW (20/15 HP)	167/92 N·m (123.2/67.9 lbf·ft)	
	[4,500 rpm (iTROL)]	[13.5/9 kW (18/12 HP)]	[150.3/100 N·m (110.9/73.8 lbf·ft)]	
10″ Spindle	3,500 rpm (FANUC)	18.5/11 kW (25/15 HP)	269/120 N·m (198.4/88.5 lbf·ft)	
	[3,500 rpm (FANUC)]	[18.5/15 kW (25/20 HP)]	[269/164 N·m (198.4/121 lbf·ft)]	
	[3,500 rpm (iTROL)]	[13.5/9 kW (18/12 HP)]	[197.6/132 N·m (145.7/97.4 lbf·ft)]	
Sub Spindle	6,000 rpm (FANUC)	7.5/3.7 kW (10/5 HP)	63.6/23.6 N·m (46.9/17.4 lbf·ft)	
	[6,000 rpm (iTROL)]	[7.4/4.9 kW (9.9/6.6 HP)]	[47/31.1 N·m (34.7/22.9 lbf·ft)]	

HEAVY DUTY CUTTING & HIGH ACCURACY

MAIN SPINDLE

Specialized in High-speed and Rough Cutting

The 6" main spindle is designed for high-speed machining by applying two and three-row ball bearings to the front and rear, respectively. In addition, the 8" and 10" main spindles are designed to match the rigid spindle structure by combining the double-row roller bearing and the angular contact bearing, which provides excellent performance for heavy-duty cutting.

Moreover, we applied the ribstar belt to minimize the slip and noise of the belt during processing, and this improvement enhanced performance of the work and increased processing stability by minimizing bearing damage caused by inflow of the oil.

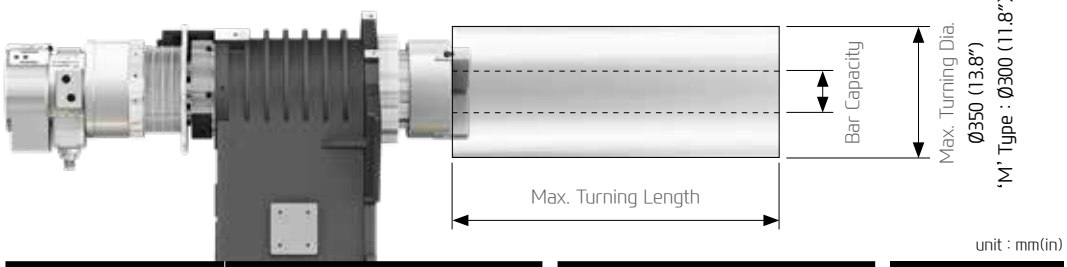

unit : mm(in)

Max. Turning Length	Standard Bed		Long Type Bed		Bar Capacity
	Servo Turret	Mill Turret	Servo Turret	Mill Turret	
6 inch	340 (13.4")	309 (12.2")	560 (22")	529 (20.8")	Ø51 (Ø2")
8 inch	307 (12.1")	288 (11.3")	558 (22")	508 (20")	Ø65 (Ø2.6")
10 inch	-	-	549 (21.6")	499 (19.6")	Ø81 (Ø3.2")

❖ **C-Axis Control** ('M' Type)

C-axis of SE Series can be controlled to 0.001° which makes it possible to process various shapes.

SUB SPINDLE ('S' Type)

The Belt-type sub spindle is designed to minimize thermal displacement during the continuous machining, offering from the heavy-duty cutting to the high-speed machining. When the main spindle cutting is completed, the sub spindle rotation is synchronized with the main spindle allowing the workpiece to be transferred to the sub spindle, and machining can begin on the back side of the workpiece.

03 SERVO TURRET

High speed, High Accuracy, Highly Reliable Servo Turret

Servo Turret

No. of Tools	Tool Size (O.D/I.D)	Indexing Time
12 EA	□ 25/Ø40 mm (□ 1″/Ø1 1/2″)	0.15 sec

BMT45 Mill Turret

Type	Speed	Motor (Max./Cont)	Torque (Max./Cont)	Collet Size
FANUC	6,000 rpm	3.85/2.59 kW (5.16/3.47 HP)	36.7/18.5 N·m (27.1/13.6 lbf·ft)	ER20 / Ø13 (0.6″)
iTROL		Cont : 2.8 kW (3.8 HP)	Cont : 27 N·m (19.9 lbf·ft)	

Quantity of mill turret tools: Std. 2ea / Opt. 24ea - Various machining with increased capacity (Prior model : max. 12ea)

VARIOUS DRIVEN PRECISION BMT TOOL HOLDERS

SERVO TURRET

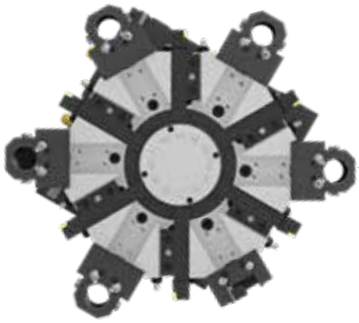

Servo Turret

The turret of SE series is applied with high performance AC servo motor, improving machining reliability. 3-piece coupling shows excellent performance in indexing. Powerful hydraulic tool clamping minimizes tool tip deviation caused by load.

70Bar High Pressure Coolant OPTION

Turret is designed to utilize **70bar** high pressure coolant and it shows optimum performance in machining difficult-to-cut material.

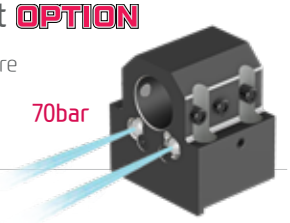

MILL TURRET

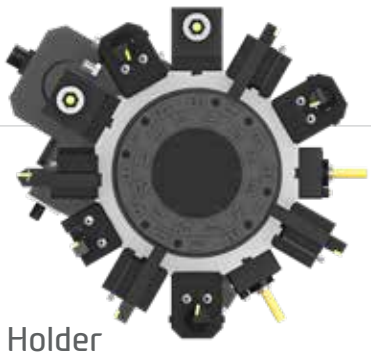

BMT45 Turret (Mill Turret)

The BMT turret secures the tool with four bolts and key on the tool mounting surface of the turret, making it possible to powerfully fix the tool, ensuring high reliability in rigidity and precision.

STRAIGHT MILLING HEAD	ANGULAR MILLING HEAD

Mill Tool Holder

Machining capability has increased with the addition of straight milling head tool holder.

Increased Rotating Tools

Straight and angular milling haed 1ea > 2ea, respectively

Special Tool OPTION

The SE series can process high value-added products using a variety of rotating tools. In particular, there is a multi-holder for attaching a variety of tools to one holder, and an eccentric rotary tool for handling eccentric parts without additional axis travel, which can realize integration of process with one machine.

❖ Consultation needed when ordering these options.

04 USER CONVENIENCE

Various Devices for User Friendly

HYDRAULIC NC TAILSTOCK

Hydraulic NC Tailstock with Position Control ('L' Type Standard)

The hydraulic NC tailstock applied to the SE series enables independent transfer through a program independently of the turret movement and it simultaneously achieved "Improvement of user convenience" and "Reduction of cycle time".

General
Programmable Quill Tailstock

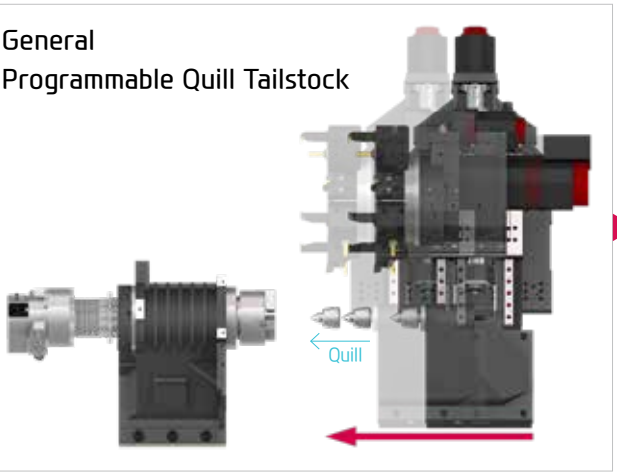

- A structure that moves by fixing the tailstock to the turret
- After fixing the tailstock, the quill operated by hydraulic pressure advances to stabilize the material
- Automation configuration error due to interference with turret during configuration of automation

SE2200 Series
Hydraulic NC Tailstock

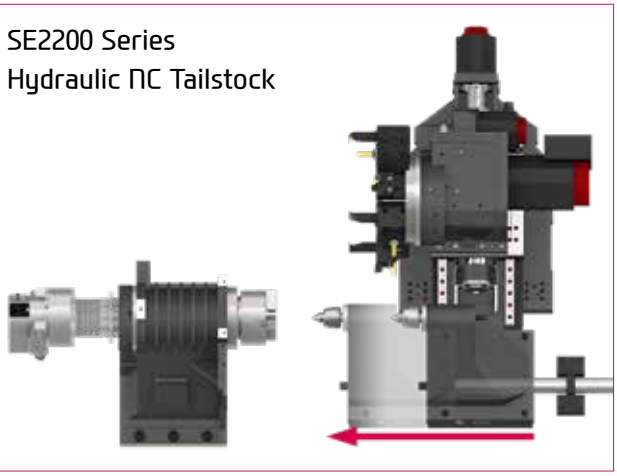

- Structure in which the tailstock moves independently from the turret (position control : 0.1mm)
- Stabilization of tailstock body hydraulic pressure
- Turret moves independently while the tailstock moves to reduce machining setup time
- Application of standard for long bed applied models among SE2200 Series (MT#4 live center application)

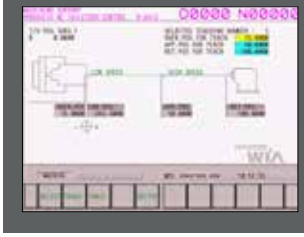

HW-TMS (TAILSTOCK OPERATION)

This software is capable of manipulation and data management of tailstock operations through intuitive GUI.

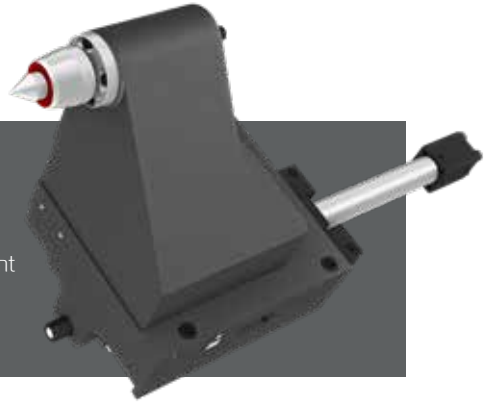

CHIP DISPOSAL SOLUTION

Timely and effective disposal of chips will enhance productivity as well as the working environment.

‹ Chip Discharge Height – Opt.1 : 860mm (33.9"), Opt. 2 : 1,200mm (47.2") ›

- **Hinge Belt Type** : Highly efficient when disposing a lot of chips. Capable of handling stringy chips. (Long Chip)
- **Scraper Type** : Convenient for shortly cut chips. (Short Chip)
- **Screw Type** : Compresses and ejects chips to reduce chip Trouble. (Lower portion of micro-chips)
- **Drum Filter Type** : Advantageous in precision, as the chips do not flow in to the coolant nozzle. (Powder, Micro Chip)

HIGH PRECISION SYSTEM & COOLANT UNIT

Automatic Q-Setter

Linear Scale

Work Probe

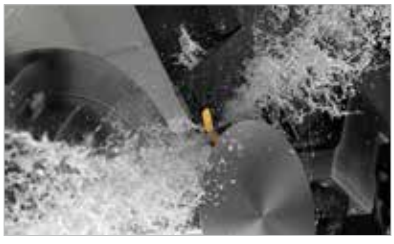

Standard Coolant (Nozzle)

Chuck Coolant (Upper Chuck)

Chuck Air Blow (Upper Chuck)

Grease Lubrication Device

- PLC control allows for timely supply of extremely small amount of grease
- System alarm (low level, line blockage)
- Oil skimmer is unnecessary
- Up to 60% reduction of annual maintenance costs compared to ordinary lubricant oil

05 HYUNDAI WIA FANUC – SMART PLUS

The Compatible All-round Control

15″ Touch-type Monitor as a standard

Smart Machine Control	Fast Cycle Time Technology
	Fine Surface Technology
	Smart Servo Control Technology
Conversational Program	SmartGuide-i
i-HMI	Machining-aid Function
Part Program Storage	5120M (2MB)
No. of Registerable Programs	1000 EA

SMART SOFTWARE

Energy Saving & ECO System

Dialogue Program (Smart Guide-i)

This software offers the maximum user convenience through dialogue manipulation from setup to processing. This includes writing processing programs and simulation checks.

Convenience Function S/W

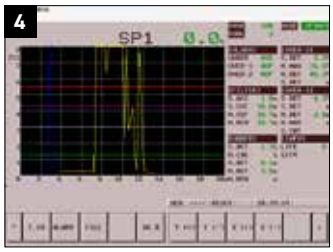

1. Thermal Displacement Compensation (HW-TDC) OPTION

This software improves processing precision by minimizing thermal deformation from changes in external environments and machining.

2. Machine Guidance (HW-MCG)

This software offers various user convenience functions such as tool manipulation, maintenance, tool monitoring, and a pop-up/status

3. LAUNCHER

This software offers shortcuts for quick access to specialized features and frequently used features.

4. Tool Monitoring (HW-TM) OPTION

This tool status monitoring software monitors and protects workpiece, tools, and equipment through real-time monitoring of the motor load from machining.

Machining Support S/W

1. Premium Tool Operation

This software offers premium graphic functions for more intuitive tool operation. (Only in iHMI tools)

2. Manual Viewer

This software enables users to view electronic manuals right from the tool. (Only in iHMI tools)

3. Scheduling

This software enables viewing/setting up directly from the tool. This allows such actions as managing customer's tool schedules and schedule notification. (Only in iHMI tools)

4. Operation Memo

This software is capable of managing customer notes such as tool information and issues. (Only in iHMI tools)

SPECIFICATIONS

SE2200A Series Standard & Optional

● : Standard ○ : Option ☆ : Prior Consultation – : Non Applicable

Spindle		A	MA	LA	LMA	LMSA
Main Sp. Hollow Chuck 3 Jaw	6″	●	●	●	●	●
Main Sp. Solid Chuck 3 Jaw	6″	○	○	○	○	○
Sub Sp. Hollow Chuck 3 Jaw	5″	–	–	–	–	●
Sub Sp. Solid Chuck 3 Jaw	5″	–	–	–	–	○
Standard Soft Jaw (1set)		●	●	●	●	●
Chuck Clamp Foot Switch		●	●	●	●	●
2 Steps Hyd. Pressure Device		○	○	○	○	○
Spindle Inside Stopper		☆	☆	☆	☆	☆
Main Spindle Cs-axis (0.001°)		–	●	–	●	●
Sub Spindle Cs-axis (0.001°)		–	–	–	–	●
Chuck Open/Close Confirmation Device		●	●	●	●	●
2 Steps Chuck Foot Switch		○	○	○	○	○
Sub Chuck Foot Switch		–	–	–	–	●
Turret						
Tool Holder		●	●	●	●	●
Mill Turret	BMT	–	●	–	●	●
Straight Milling Head (Axial)	Collet Type, 2ea	–	●	–	●	●
Angular Milling Head (Radial)	Collet Type, 2ea	–	●	–	●	●
Straight Milling Head (Axial)	Adapter Type	–	○	–	○	○
Angular Milling Head (Radial)	Adapter Type	–	○	–	○	○
Boring Sleeve		●	●	●	●	●
Drill Socket		○	○	○	○	○
U-Drill Cap		●	●	●	●	●
Angle Head		●	●	●	●	●
Angle Head		–	☆	–	☆	☆
Tail Stock & Steady Rest						
Hydraulic NC Tail Stock (Std. Live Center)		○	○	●	●	–
High Precesion Live Center		☆	☆	☆	☆	–
Tail Stock Foot Switch		○	○	○	○	–
Coolant & Air Blow						
Standard Coolant (Nozzle)		●	●	●	●	●
Chuck Coolant (Upper Chuck)		○	○	○	○	○
Gun Coolant		○	○	○	○	○
Through Spindle Coolant (Only for Special Chuck)		☆	☆	☆	☆	☆
Chuck Air Blow (Upper Chuck)		○	○	○	○	○
Sub Chuck Air Blow		–	–	–	–	○
Turnmill Through Coolant		–	○	–	○	○
Tail Stock Air Blow (Upper Tail Stock)		○	○	○	○	–
Turret Air Blow		☆	☆	☆	☆	☆
Air Gun		○	○	○	○	○
Through Spindle Air Blow (Only for Special Chuck)		–	–	–	–	–
High Pressure Coolant	0.5Bar	●	●	●	●	●
	6Bar	○	○	○	○	○
	20Bar	○	○	○	○	○
	70Bar	○	○	○	○	○
Power Coolant System (For Automation)		☆	☆	☆	☆	☆
Coolant Chiller (When selecting Sub Tank Type, Chip Conveyor)		–	–	–	–	–
Chip Disposal						
Coolant Tank	Front(150ℓ [39.6 gal])	●	●	–	–	–
	Front(200ℓ [52.8 gal])	–	–	●	●	●
	Rear(150ℓ [39.6 gal])	○	○	○	○	○
Chip Conveyor (Hinge/Scraper/Screw)	Front (Right)	○	○	○	○	○
	Rear (Rear)	○	○	○	○	○
Special Chip Conveyor (Drum Filter)		–	–	–	–	–
Chip Wagon	Standard (180ℓ [47.5 gal])	○	○	○	○	○
	Swing (200ℓ [52.8 gal])	○	○	○	○	○
	Large Size (330ℓ [87.2 gal])	○	○	○	○	○
	Customized	☆	☆	☆	☆	☆
Safety Device						
Total Splash Guard		●	●	●	●	●
Back Spin Torque Limiter (BST)		●	●	●	●	●
Chuck Hydraulic Pressure Maintenance Interlock		☆	☆	☆	☆	☆
ETC						
Tool Box		●	●	●	●	●
Customized Color	Need Munsel No.	☆	☆	☆	☆	☆
CAD & CAM		☆	☆	☆	☆	☆

Electric Device		A	MA	LA	LMA	LMSA
Call Light	1Color : ■	●	●	●	●	●
Call Light & Buzzer	3Color : ■ ■ ■ B	○	○	○	○	○
Electric Cabinet Light		○	○	○	○	○
Remote MPG		○	○	○	○	○
Work Counter	Digital	○	○	○	○	○
Total Counter	Digital	○	○	○	○	○
Tool Counter	Digital	○	○	○	○	○
Multi Tool Counter	6ea	○	○	○	○	○
	9ea	○	○	○	○	○
Electric Circuit Breaker		○	○	○	○	○
AVR (Auto Voltage Regulator)		☆	☆	☆	☆	☆
Transformer	25kVA	○	○	○	○	–
	30kVA	–	–	–	–	○
Auto Power Off		○	○	○	○	○
Measurement						
Q-Setter		○	○	○	○	○
Automatic Q-Setter		○	○	○	○	○
Work Close Confirmation Device (Only for Special Chuck)	TACO	○	○	○	○	○
	SMC	○	○	○	○	○
Work Setter		☆	☆	☆	☆	☆
Linear Scale	X axis	○	○	○	○	○
	Z axis	○	○	○	○	○
Coolant Level Sensor (Only for Chip Conveyor)		☆	☆	☆	☆	☆
Environment						
Air Conditioner	FANUC	○	○	○	○	○
	iTROL	○	○	○	○	●
Dehumidifier		○	○	○	○	○
Oil Mist Collector		☆	☆	☆	☆	☆
Oil Skimmer (Only for Chip Conveyor)		○	○	○	○	○
MQL (Minimal Quantity Lubrication)		☆	☆	☆	☆	☆
Fixture & Automation						
Auto Door	High-speed	○	○	○	○	○
Auto Shutter (Only for Automatic System)		○	○	○	○	○
Sub Operation Pannel		☆	☆	☆	☆	☆
Bar Feeder Interface		○	○	○	○	○
Bar Feeder (FEDEK)		☆	☆	☆	☆	☆
Extra M-Code 4ea		○	○	○	○	○
Automation Interface		☆	☆	☆	☆	☆
I/O Extension (IN & OUT)	16 Contact	○	○	○	○	○
	32 Contact	○	○	○	○	○
Parts Catcher	Main SP.	○	○	○	○	○
	Sub SP.	–	–	–	–	○
Sub Spindle Work Pusher (Spring Type)		–	–	–	–	○
Sub Spindle Work Ejector (Pneumatic Type)		–	–	–	–	○
Turret Work Pusher (For Automation)		☆	☆	☆	☆	☆
Parts Conveyor (Required Main Parts Catcher)		○	○	○	○	○
Semi Automation System		☆	☆	☆	☆	☆
Hyd. Device						
Standard Hyd. Cylinder	Hollow	●	●	●	●	●
Standard Hyd. Unit {35bar (507.6 psi)}	15ℓ (4gal)	●	●	●	●	–
	20ℓ (5.3gal)	–	–	–	–	●
S/W						
DNC software (HW-eDNC)		○	○	○	○	○
Machine Monitoring System (HW-MMS Cloud/Edge/Remote)		○	○	○	○	○
Machine Monitoring System & Analysis (HW-MMS Edge Plus)		☆	☆	☆	☆	☆
Automation CAM program (HW-ACAM)		○	–	○	–	–
Conversational program (HW-DPRO)		○	○	○	○	○
SmartGuide-i : FANUC		●	●	●	●	●
Thermal Displacement Compensation (HW-TDC)		○	○	○	○	○
Tool Monitoring (HW-TM) : FANUC		○	○	○	○	○
Machine Guidance (HW-MCG) : FANUC		●	●	●	●	●
Energy Saving System (HW-ESS) : FANUC		●	●	●	●	●
Premium Tool Operation : FANUC		●	●	●	●	●
Manual Viewer : FANUC		●	●	●	●	●
Scheduling : FANUC		●	●	●	●	●
Operation Memo : FANUC		●	●	●	●	●

❖ Thermal Displacement Compensation device is recommended, when more than 6 bar of high pressure coolant is applied, for the high quality machining.

Specifications are subject to change without notice for improvement.

SPECIFICATIONS

SE2200 Series Standard & Optional

● : Standard ○ : Option ☆ : Prior Consultation – : Non Applicable

Spindle		SE2200	M	L	LM	LMS
Main Sp. Hollow Chuck 3 Jaw	8"	●	●	●	●	●
Main Sp. Solid Chuck 3 Jaw	8"	○	○	○	○	○
Sub Sp. Hollow Chuck 3 Jaw	5"	–	–	–	–	●
Sub Sp. Solid Chuck 3 Jaw	5"	–	–	–	–	○
Standard Soft Jaw (1set)		●	●	●	●	●
Chuck Clamp Foot Switch		●	●	●	●	●
2 Steps Hyd, Pressure Device		○	○	○	○	○
Spindle Inside Stopper		☆	☆	☆	☆	☆
Main Spindle Cs-axis (0.001°)		–	●	–	●	●
Sub Spindle Cs-axis (0.001°)		–	–	–	–	●
Chuck Open/Close Confirmation Device		●	●	●	●	●
2 Steps Chuck Foot Switch		○	○	○	○	○
Sub Chuck Foot Switch		–	–	–	–	●
Turret						
Tool Holder		●	●	●	●	●
Mill Turret	BMT	–	●	–	●	●
Straight Milling Head (Axial)	Collet Type, 2ea	–	●	–	●	●
Angular Milling Head (Radial)	Collet Type, 2ea	–	●	–	●	●
Straight Milling Head (Axial)	Adapter Type	–	○	–	○	○
Angular Milling Head (Radial)	Adapter Type	–	○	–	○	○
Boring Sleeve		●	●	●	●	●
Drill Socket		○	○	○	○	○
U-Drill Cap		●	●	●	●	●
Angle Head		●	●	●	●	●
Angle Head		–	☆	–	☆	☆
Tail Stock & Steady Rest						
Hydraulic NC Tail Stock (Std. Live Center)		○	○	●	●	–
High Precesion Live Center		☆	☆	☆	☆	–
Tail Stock Foot Switch		○	○	○	○	–
Coolant & Air Blow						
Standard Coolant (Nozzle)		●	●	●	●	●
Chuck Coolant (Upper Chuck)		○	○	○	○	○
Gun Coolant		○	○	○	○	○
Through Spindle Coolant (Only for Special Chuck)		☆	☆	☆	☆	☆
Chuck Air Blow (Upper Chuck)		○	○	○	○	○
Sub Chuck Air Blow		–	–	–	–	○
Turnmill Through Coolant		–	○	–	○	○
Tail Stock Air Blow (Upper Tail Stock)		○	○	○	○	–
Turret Air Blow		☆	☆	☆	☆	☆
Air Gun		○	○	○	○	○
Through Spindle Air Blow (Only for Special Chuck)		–	–	–	–	–
High Pressure Coolant	0.5Bar	●	●	●	●	●
	6Bar	○	○	○	○	○
	20Bar	○	○	○	○	○
	70Bar	○	○	○	○	○
Power Coolant System (For Automation)		☆	☆	☆	☆	☆
Coolant Chiller (When selecting Sub Tank Type, Chip Conveyor)		–	–	–	–	–
Chip Disposal						
Coolant Tank	Front(150 ℓ [39.6 gal])	●	●	–	–	–
	Front(200 ℓ [52.8 gal])	–	–	●	●	●
	Rear(150 ℓ [39.6 gal])	○	○	○	○	○
Chip Conveyor (Hinge/Scraper/Screw)	Front (Right)	○	○	○	○	○
	Rear (Rear)	○	○	○	○	○
Special Chip Conveyor (Drum Filter)		–	–	–	–	–
Chip Wagon	Standard (180 ℓ [47.5 gal])	○	○	○	○	○
	Swing (200 ℓ [52.8 gal])	○	○	○	○	○
	Large Size (330 ℓ [87.2 gal])	○	○	○	○	○
	Customized	☆	☆	☆	☆	☆
Safety Device						
Total Splash Guard		●	●	●	●	●
Back Spin Torque Limiter (BST)		●	●	●	●	●
Chuck Hydraulic Pressure Maintenance Interlock		☆	☆	☆	☆	☆
ETC						
Tool Box		●	●	●	●	●
Customized Color	Need Munsel No.	☆	☆	☆	☆	☆
CAD & CAM		☆	☆	☆	☆	☆

Electric Device		SE2200	M	L	LM	LMS
Call Light	1Color : ■	●	●	●	●	●
Call Light & Buzzer	3Color : ■ ■ ■ B	○	○	○	○	○
Electric Cabinet Light		○	○	○	○	○
Remote MPG		○	○	○	○	○
Work Counter	Digital	○	○	○	○	○
Total Counter	Digital	○	○	○	○	○
Tool Counter	Digital	○	○	○	○	○
Multi Tool Counter	6ea	○	○	○	○	○
	9ea	○	○	○	○	○
Electric Circuit Breaker		○	○	○	○	○
AVR (Auto Voltage Regulator)		☆	☆	☆	☆	☆
Transformer	25kVA	○	○	○	○	–
	30kVA	–	–	–	–	○
Auto Power Off		○	○	○	○	○
Measurement						
Q-Setter		○	○	○	○	○
Automatic Q-Setter		○	○	○	○	○
Work Close Confirmation Device (Only for Special Chuck)	TACO	○	○	○	○	○
	SMC	○	○	○	○	○
Work Setter		☆	☆	☆	☆	☆
Linear Scale	X axis	○	○	○	○	○
	Z axis	○	○	○	○	○
Coolant Level Sensor (Only for Chip Conveyor)		☆	☆	☆	☆	☆
Environment						
Air Conditioner	FANUC	○	○	○	○	○
	iTROL	○	○	○	○	●
Dehumidifier		○	○	○	○	○
Oil Mist Collector		☆	☆	☆	☆	☆
Oil Skimmer (Only for Chip Conveyor)		○	○	○	○	○
MQL (Minimal Quantity Lubrication)		☆	☆	☆	☆	☆
Fixture & Automation						
Auto Door	High-speed	○	○	○	○	○
Auto Shutter (Only for Automatic System)		○	○	○	○	○
Sub Operation Pannel		☆	☆	☆	☆	☆
Bar Feeder Interface		○	○	○	○	○
Bar Feeder (FEDEK)		☆	☆	☆	☆	☆
Extra M-Code 4ea		○	○	○	○	○
Automation Interface		☆	☆	☆	☆	☆
I/O Extension (IN & OUT)	16 Contact	○	○	○	○	○
	32 Contact	○	○	○	○	○
Parts Catcher	Main SP.	○	○	○	○	○
	Sub SP.	–	–	–	–	○
Sub Spindle Work Pusher (Spring Type)		–	–	–	–	○
Sub Spindle Work Ejector (Pneumatic Type)		–	–	–	–	○
Turret Work Pusher (For Automation)		☆	☆	☆	☆	☆
Parts Conveyor (Required Main Parts Catcher)		○	○	○	○	○
Semi Automation System		☆	☆	☆	☆	☆
Hyd. Device						
Standard Hyd. Cylinder	Hollow	●	●	●	●	●
Standard Hyd. Unit {35bar (507.6 psi)}	15 ℓ (4gal)	●	●	●	●	–
	20 ℓ (5.3gal)	–	–	–	–	●
S/W						
DNC software (HW-eDNC)		○	○	○	○	○
Machine Monitoring System (HW-MMS Cloud/Edge/Remote)		○	○	○	○	○
Machine Monitoring System & Analysis (HW-MMS Edge Plus)		☆	☆	☆	☆	☆
Automation CAM program (HW-ACAM)		○	–	○	–	–
Conversational program (HW-DPRO)		○	○	○	○	○
SmartGuide-i : FANUC		●	●	●	●	●
Thermal Displacement Compensation (HW-TDC)		○	○	○	○	○
Tool Monitoring (HW-TM) : FANUC		○	○	○	○	○
Machine Guidance (HW-MCG) : FANUC		●	●	●	●	●
Energy Saving System (HW-ESS) : FANUC		●	●	●	●	●
Premium Tool Operation : FANUC		●	●	●	●	●
Manual Viewer : FANUC		●	●	●	●	●
Scheduling : FANUC		●	●	●	●	●
Operation Memo : FANUC		●	●	●	●	●

❖ Thermal Displacement Compensation device is recommended, when more than 6 bar of high pressure coolant is applied, for the high quality machining.

Specifications are subject to change without notice for improvement.

SPECIFICATIONS

SE2200C Series Standard & Optional

● : Standard ○ : Option ☆ : Prior Consultation – : Non Applicable

Spindle		LC	LMC	LMSC
Main Sp. Hollow Chuck 3 Jaw	10"	●	●	●
Main Sp. Solid Chuck 3 Jaw	10"	○	○	○
Sub Sp. Hollow Chuck 3 Jaw	5"	–	–	●
Sub Sp. Solid Chuck 3 Jaw	5"	–	–	○
Standard Soft Jaw (1set)		●	●	●
Chuck Clamp Foot Switch		●	●	●
2 Steps Hyd. Pressure Device		○	○	○
Spindle Inside Stopper		☆	☆	☆
Main Spindle Cs-axis (0.001°)		–	●	●
Sub Spindle Cs-axis (0.001°)		–	–	●
Chuck Open/Close Confirmation Device		●	●	●
2 Steps Chuck Foot Switch		○	○	○
Sub Chuck Foot Switch		–	–	●
Turret				
Tool Holder		●	●	●
Mill Turret	BMT	–	●	●
Straight Milling Head (Axial)	Collet Type, 2ea	–	●	●
Angular Milling Head (Radial)	Collet Type, 2ea	–	●	●
Straight Milling Head (Axial)	Adapter Type	–	○	○
Angular Milling Head (Radial)	Adapter Type	–	○	○
Boring Sleeve (U-drill Holder/Sleeve : Public Use)		●	●	●
Drill Socket		○	○	○
U-Drill Cap		●	●	●
Angle Head		●	●	●
Angle Head		–	☆	☆
Tail Stock & Steady Rest				
Hydraulic NC Tail Stock (Std. Live Center)		●	●	–
High Precesion Live Center		☆	☆	–
Tail Stock Foot Switch		○	○	–
Coolant & Air Blow				
Standard Coolant (Nozzle)		●	●	●
Chuck Coolant (Upper Chuck)		○	○	○
Gun Coolant		○	○	○
Through Spindle Coolant (Only for Special Chuck)		☆	☆	☆
Chuck Air Blow (Upper Chuck)		○	○	○
Sub Chuck Air Blow		–	–	○
Turnmill Through Coolant		–	○	○
Tail Stock Air Blow (Upper Tail Stock)		○	○	–
Turret Air Blow		☆	☆	☆
Air Gun		○	○	○
Through Spindle Air Blow (Only for Special Chuck)		–	–	–
High Pressure Coolant	0.5Bar	●	●	●
	6Bar	○	○	○
	20Bar	○	○	○
	70Bar	○	○	○
Power Coolant System (For Automation)		☆	☆	☆
Coolant Chiller (When Selecting Sub Tank Type, Chip Conveyor)		–	–	–
Chip Disposal				
Coolant Tank	Front(150ℓ [39.6 gal])	–	–	–
	Front(200ℓ [52.8 gal])	●	●	●
	Rear(150ℓ [39.6 gal])	○	○	○
Chip Conveyor (Hinge/Scraper/Screw)	Front (Right)	○	○	○
	Rear (Rear)	○	○	○
Special Chip Conveyor (Drum Filter)		–	–	–
Chip Wagon	Standard (180ℓ [47.5 gal])	○	○	○
	Swing (200ℓ [52.8 gal])	○	○	○
	Large Size (330ℓ [87.2 gal])	○	○	○
	Customized	☆	☆	☆
Safety Device				
Total Splash Guard		●	●	●
Back Spin Torque Limiter (BST)		●	●	●
Chuck Hydraulic Pressure Maintenance Interlock		☆	☆	☆
ETC				
Tool Box		●	●	●
Customized Color	Need Munsel No.	☆	☆	☆
CAD & CAM		☆	☆	☆

Electric Device		LC	LMC	LMSC
Call Light	1Color : ■	●	●	●
Call Light & Buzzer	3Color : ■ ■ ■ B	○	○	○
Electric Cabinet Light		○	○	○
Remote MPG		○	○	○
Work Counter	Digital	○	○	○
Total Counter	Digital	○	○	○
Tool Counter	Digital	○	○	○
Multi Tool Counter	6ea	○	○	○
	9ea	○	○	○
Electric Circuit Breaker		○	○	○
AVR (Auto Voltage Regulator)		☆	☆	☆
Transformer	25kVA	○	○	–
	30kVA	–	–	○
Auto Power Off		○	○	○
Measurement				
Q-Setter		○	○	○
Automatic Q-Setter		○	○	○
Work Close Confirmation Device (Only for Special Chuck)	TACO	○	○	○
	SMC	○	○	○
Work Setter		☆	☆	☆
Linear Scale	X axis	○	○	○
	Z axis	○	○	○
Coolant Level Sensor (Only for Chip Conveyor)		☆	☆	☆
Environment				
Air Conditioner	FANUC	○	○	○
	iTROL	○	○	●
Dehumidifier		○	○	○
Oil Mist Collector		☆	☆	☆
Oil Skimmer (Only for Chip Conveyor)		○	○	○
MQL (Minimal Quantity Lubrication)		☆	☆	☆
Fixture & Automation				
Auto Door	High-speed	○	○	○
Auto Shutter (Only for Automatic System)		○	○	○
Sub Operation Pannel		☆	☆	☆
Bar Feeder Interface		○	○	○
Bar Feeder (FEDEK)		☆	☆	☆
Extra M-Code 4ea		○	○	○
Automation Interface		☆	☆	☆
I/O Extension (IN & OUT)	16 Contact	○	○	○
	32 Contact	○	○	○
Parts Catcher	Main SP.	○	○	○
	Sub SP.	–	–	○
Sub Spindle Work Pusher (Spring Type)		–	–	○
Sub Spindle Work Ejector (Pneumatic Type)		–	–	○
Turret Work Pusher (For Automation)		☆	☆	☆
Parts Conveyor (Required Main Parts Catcher)		○	○	○
Semi Automation System		☆	☆	☆
Hyd. Device				
Standard Hyd. Cylinder	Hollow	●	●	●
Standard Hyd. Unit {35bar (507.6 psi)}	15ℓ (4gal)	●	●	–
	20ℓ (5.3gal)	–	–	●
S/W				
DNC software (HW-eDNC)		○	○	○
Machine Monitoring System (HW-MMS Cloud/Edge/Remote)		○	○	○
Machine Monitoring System & Analysis (HW-MMS Edge Plus)		☆	☆	☆
Automation CAM program (HW-ACAM)		○	–	–
Conversational program (HW-DPRO)		○	○	○
SmartGuide-i : FANUC		●	●	●
Thermal Displacement Compensation (HW-TDC)		○	○	○
Tool Monitoring (HW-TM) : FANUC		○	○	○
Machine Guidance (HW-MCG) : FANUC		●	●	●
Energy Saving System (HW-ESS) : FANUC		●	●	●
Premium Tool Operation : FANUC		●	●	●
Manual Viewer : FANUC		●	●	●
Scheduling : FANUC		●	●	●
Operation Memo : FANUC		●	●	●

❖ Thermal Displacement Compensation device is recommended, when more than 6 bar of high pressure coolant is applied, for the high quality machining.

Specifications are subject to change without notice for improvement.

SPECIFICATIONS

HYUNDAI WIA FANUC - SMART PLUS Spindle Output/Torque Diagram

SE2200A Series 6,000 rpm

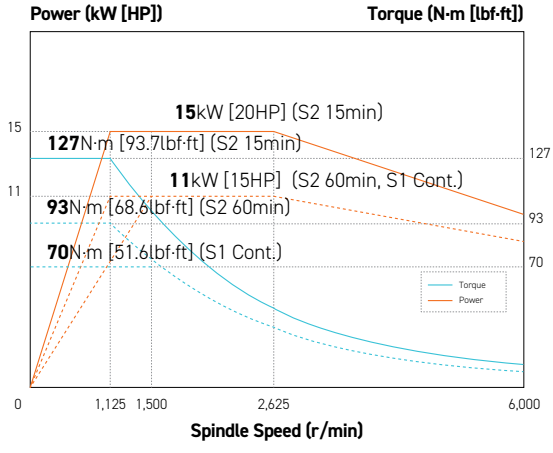

SE2200 Series 4,500 rpm

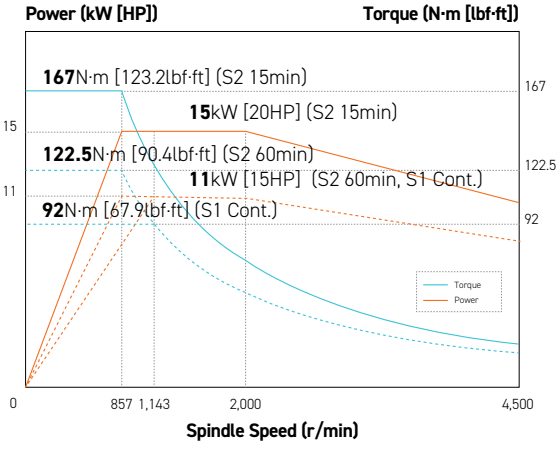

SE2200C Series 3,500 rpm

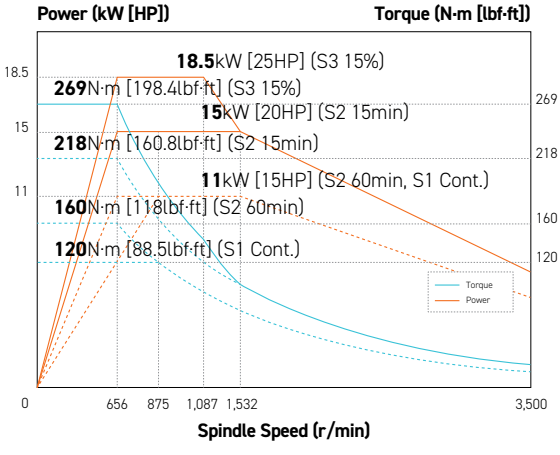

SE2200C Series 3,500 rpm (Power Up)

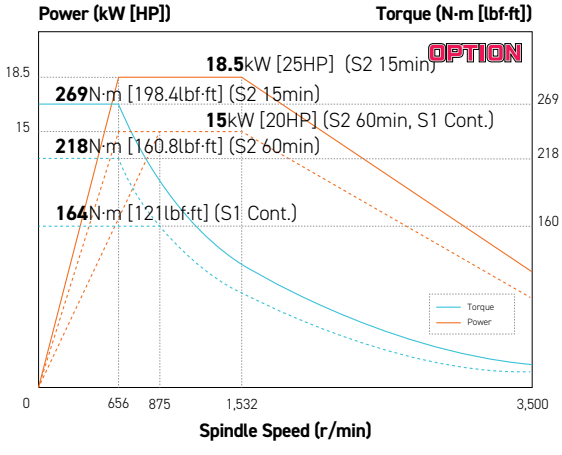

Sub Spindle 6,000 rpm

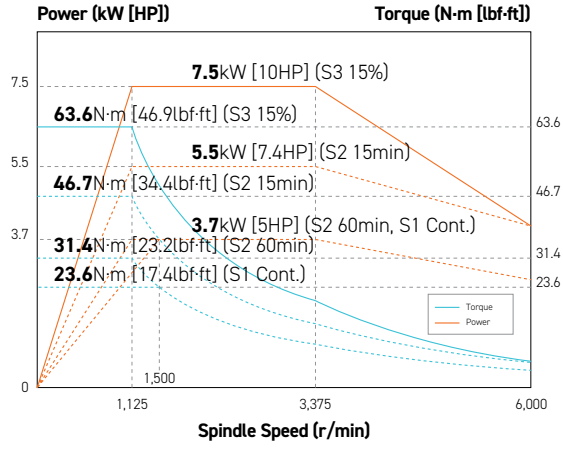

Mill Turret 6,000 rpm

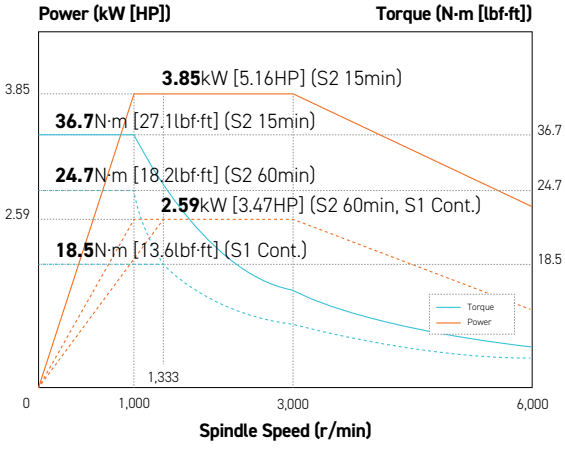

SPECIFICATIONS

HYUNDAI-iTROL Spindle Output/Torque Diagram

SE2200A Series 6,000 rpm

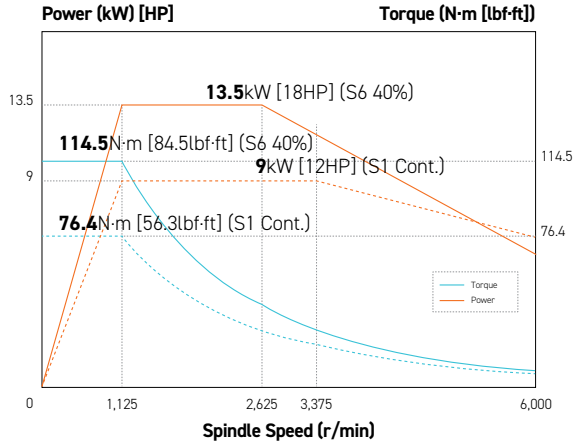

SE2200 Series 4,500 rpm

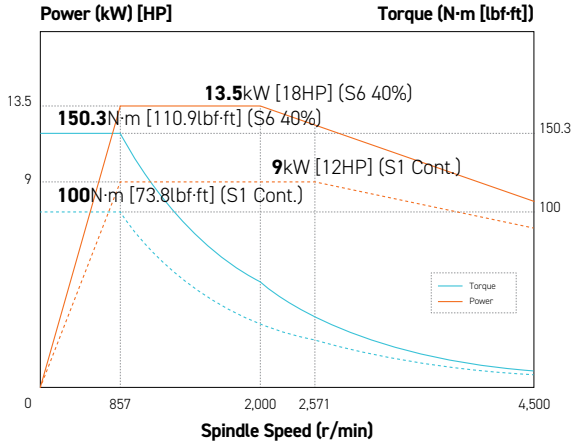

SE2200C Series 3,500 rpm

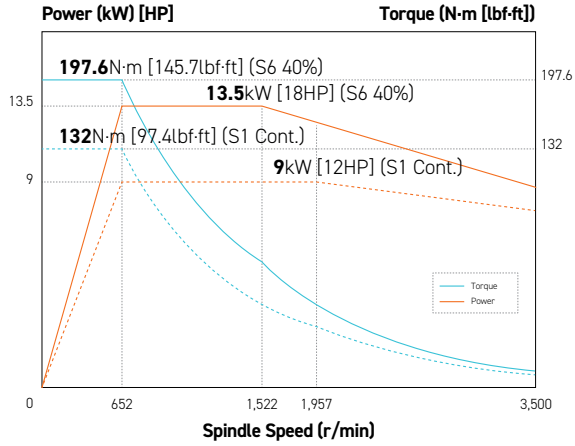

Sub Spindle 6,000 rpm

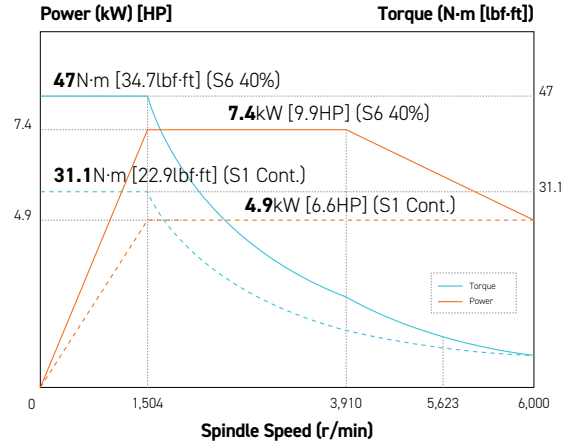

Mill Turret 6,000 rpm

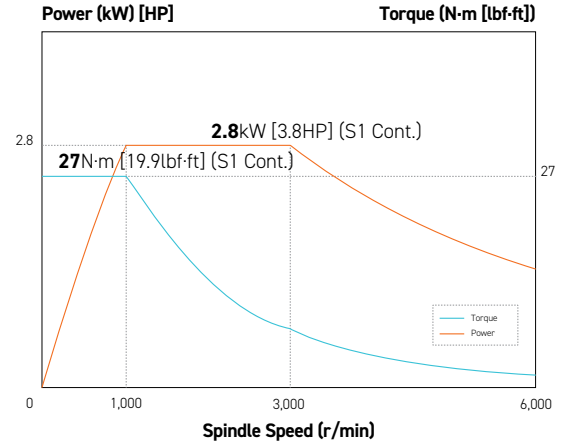

SPECIFICATIONS

External Dimensions

unit : mm(in)

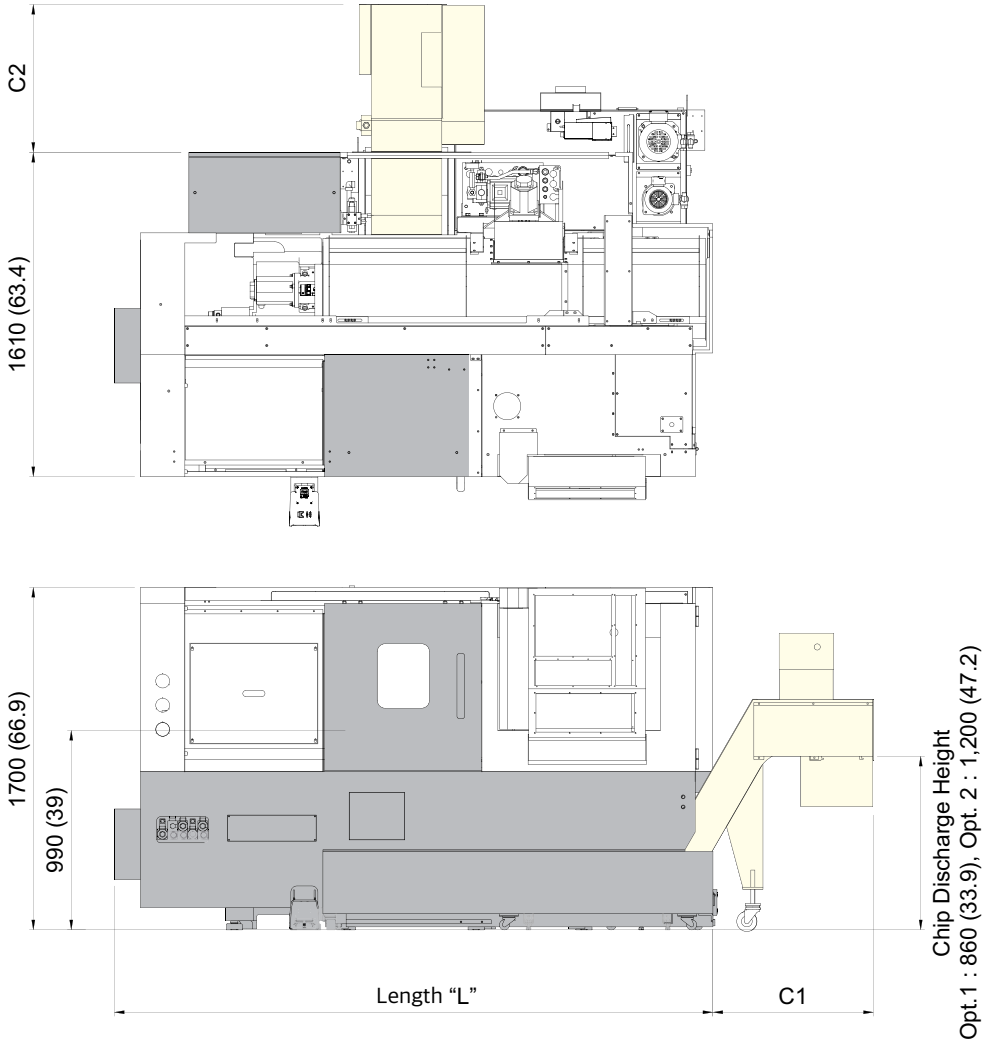

ITEM	SE Series	Length "L"
2-axis	SE2200A	2,120 mm (83.5")
	SE2200	2,190 mm (86.2")
	SE2200LA/L/LC	2,970 mm (116.9")
MILL	SE2200MA	2,150 mm (84.6")
	SE2200M	2,220 mm (87.4")
	SE2200LMA/LM/LMC	2,970 mm (116.9")
SUB	SE2200LMSA/LMS/LMSC	2,970 mm (116.9")

ITEM	Chip Discharge Height	C1 / C2
Chip Conveyor	Option 1 : 860 mm (33.9")	930 mm (36.6")
	Option 2 : 1,200 mm (47.2")	1,130 mm (44.5")

SPECIFICATIONS

Interference

unit : mm(in)

SE2200A/LA
SE2200/L

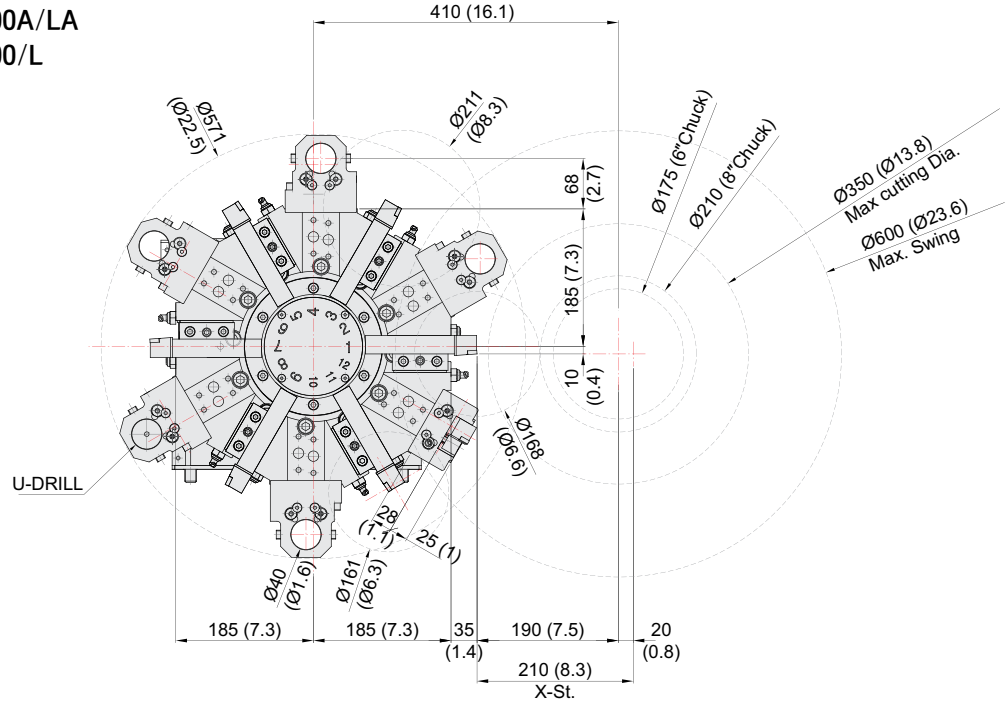

SE2200LC

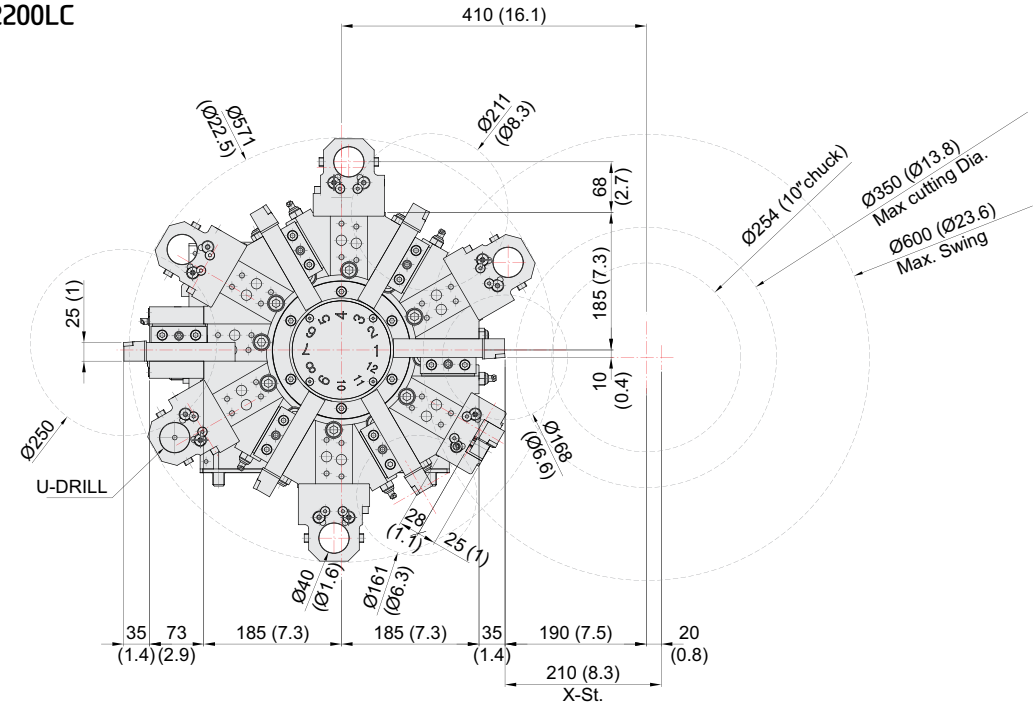

SPECIFICATIONS

Interference

unit : mm(in)

SE2200MA/LMA
SE2200M/LM
SE2200LMC

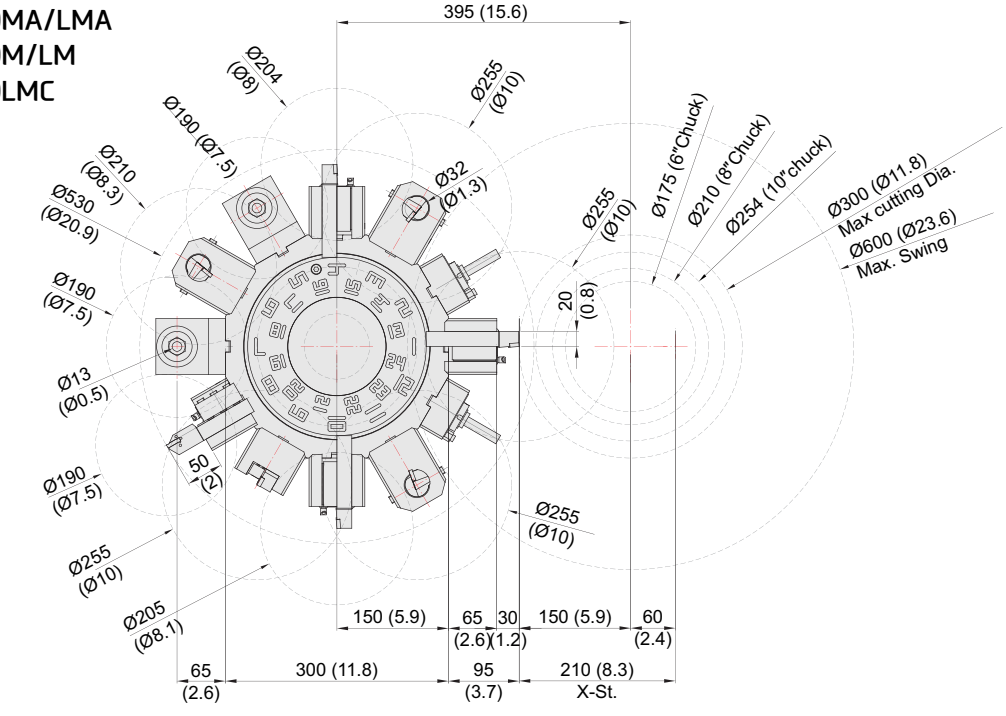

SE2200LMSA
SE2200LMS
SE2200LMSC

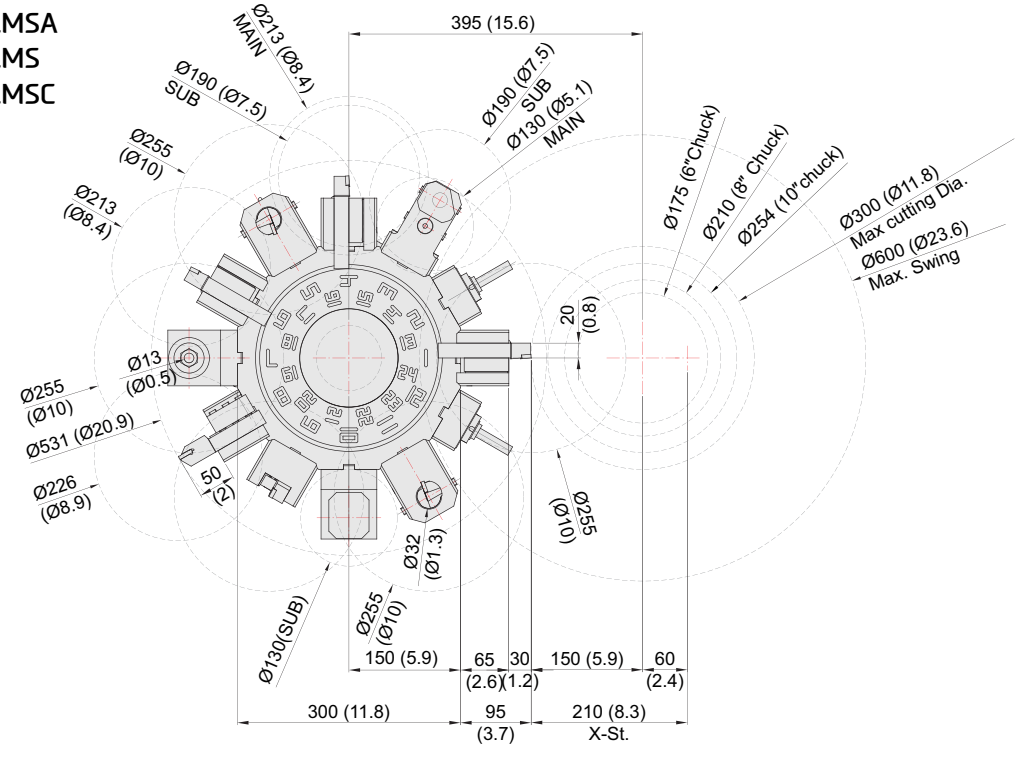

SPECIFICATIONS

Tooling System

unit : mm(in)

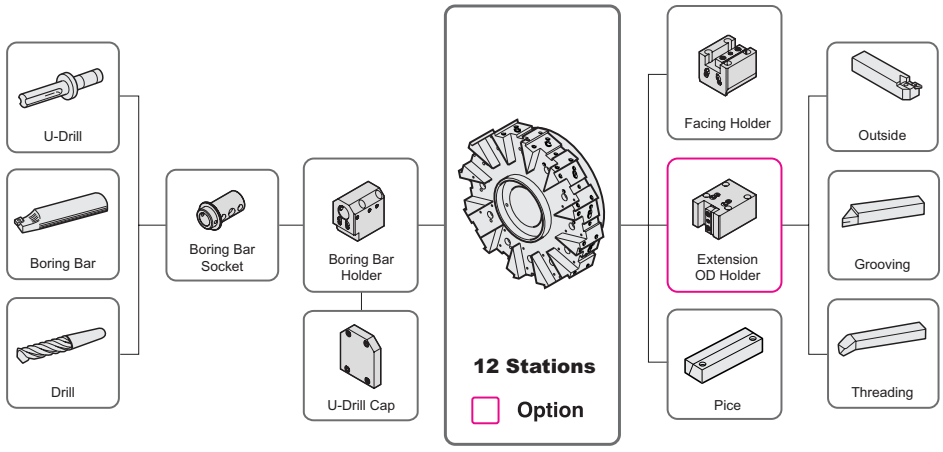

Std. Turret Tooling Parts Detail (SE2200/A/LA/L/LC)

ITEM			6/8 inch	10 inch
Turning Holder	Clamper		6	5
	O.D Holder	Extenstion	-	1
	Facing Holder		1	1
Boring Holder	I.D Holder	Single (Ø40, Ø1 1/2")	5	5
	U-Drill Holder	Cap	1	1
Driven Holder	Straight Mill Holder	Standard	-	-
		TTC	-	-
	Angular Mill Holder	Standard	-	-
		TTC	-	-
Socket	Boring	Ø10 (Ø3/8")	1	1
		Ø12 (Ø1/2")	1	1
		Ø16 (Ø5/8")	1	1
		Ø20 (Ø3/4")	1	1
		Ø25 (Ø1")	1	1
		Ø32 (Ø1 1/4")	1	1
	Drill	MT 1	Opt.	Opt.
		MT 2	Opt.	Opt.
	ER Collet		-	-

❖ Expansion external holder provided only for SE2200LC model

Specifications are subject to change without notice for improvement.

SPECIFICATIONS

Tooling System

unit : mm(in)

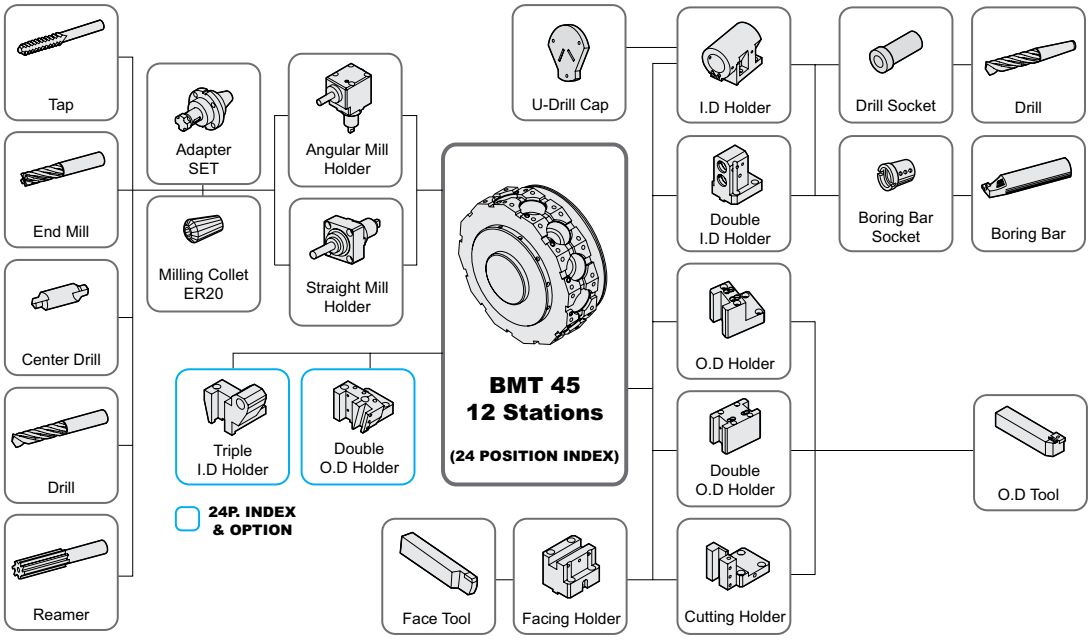

Mill Turret Tooling Parts Detail (SE2200MA/LMA/M/LM/LMC/LMSA/LMS/LMSC)

ITEM			"M" Type		"MS" Type	
			12 Stations	[24 Stations]	12 Stations	[24 Stations]
Turning Holder	O.D Holder	Right/Left	3	2	2	-
		Double	-	-	1	1
		Double (24P, Main)	-	1	-	1
		Double (24P, Sub)	-	-	-	1
	Facing Holder		1	1	1	1
	Cutting Holder		1	1	1	1
Boring Holder	I.D Holder	Single	2	1	1	-
		Double	-	-	1	1
		Triple	-	1	-	1
	U-Drill Holder	Cap	1	1	1	1
Driven Holder	Straight Mill Holder	Standard	2	2	2	2
	Angular Mill Holder	Standard	2	2	2	2
Socket	Boring	Ø10 (Ø3/8")	1	1	1	1
		Ø12 (Ø1/2")	1	1	1	1
		Ø16 (Ø5/8")	1	1	1	1
		Ø20 (Ø3/4")	1	1	1	1
		Ø25 (Ø1")	1	1	1	1
	Sub Boring	Ø8 (5/16")	-	-	1	1
		Ø10 (Ø3/8")	-	-	1	1
		Ø12 (1/2")	-	-	1	1
		Ø16 (5/8")	-	-	1	1
	Drill	MT 1	Opt.	Opt.	Opt.	Opt.
		MT 2	Opt.	Opt.	Opt.	Opt.
	ER Collet		1 Set	1 Set	1 Set	1 Set
	Adapter Set		Opt.	Opt.	Opt.	Opt.

Specifications are subject to change without notice for improvement.

SPECIFICATIONS

Tooling Travel Range (SE2200A/LA | SE2200/L/LC)

unit : mm(in)

O.D Tool

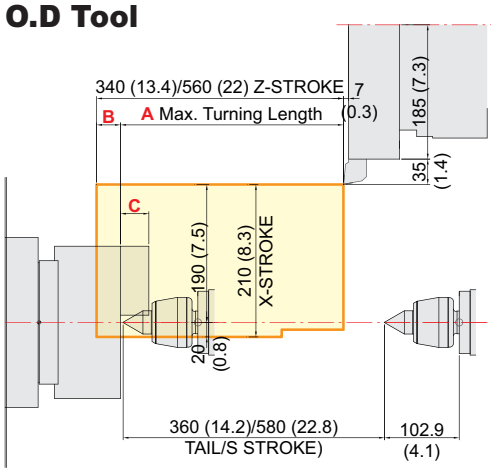

Face Tool

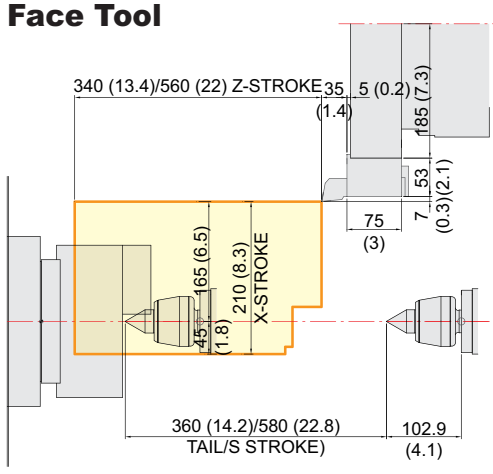

I.D Tool

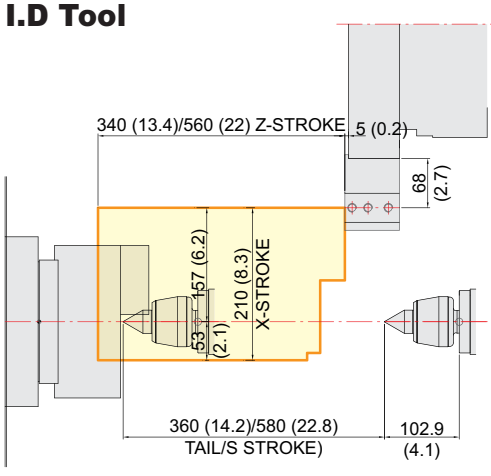

SE2200LC Extension Tool

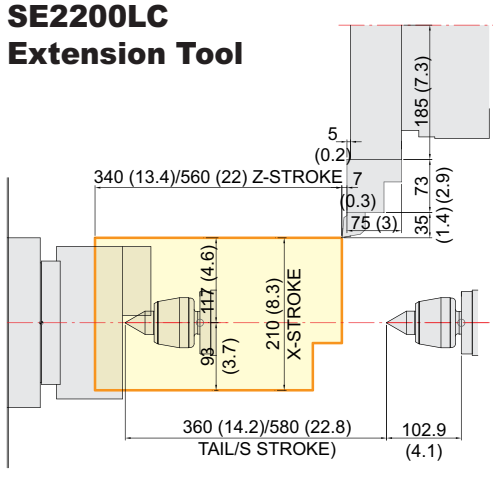

ITEM	A	B	C
SE2200A	340 (13.4)	-	32.5 (1.3)
SE2200LA	560 (22)		
SE2200	307 (12.1)	33 (1.3)	39 (1.5)
SE2200L	558 (22)	2 (0.08)	
SE2200LC	549 (21.6)	11 (0.43)	43 (1.7)

SPECIFICATIONS

Tooling Travel Range (SE2200MA/LMA | SE2200M/LM/LMC)

unit : mm(in)

O.D Tool

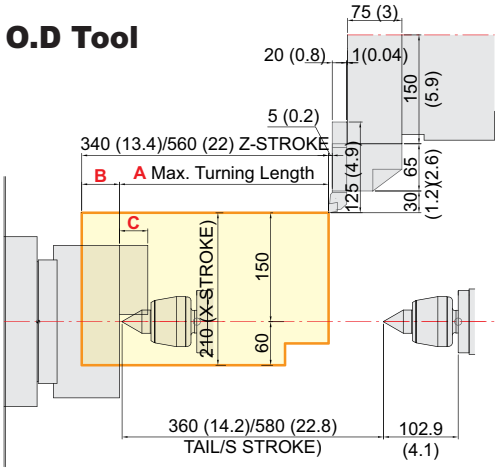

Straight Driven

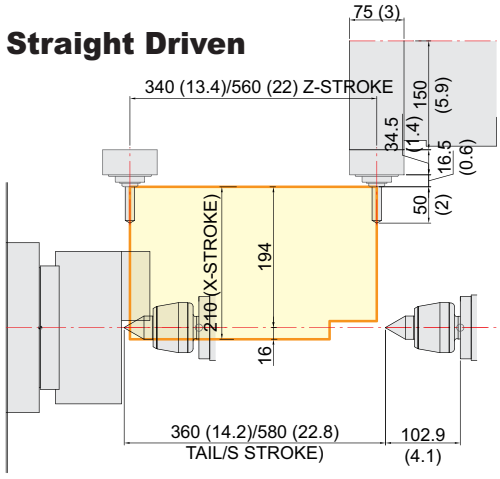

I.D Tool

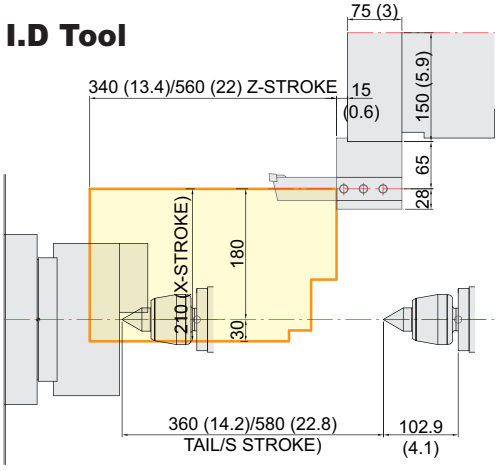

Angular Driven

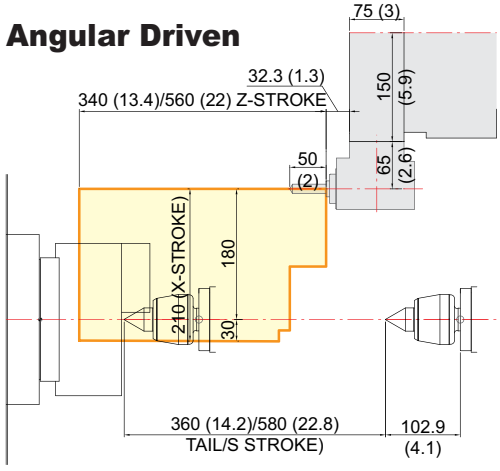

Face Tool

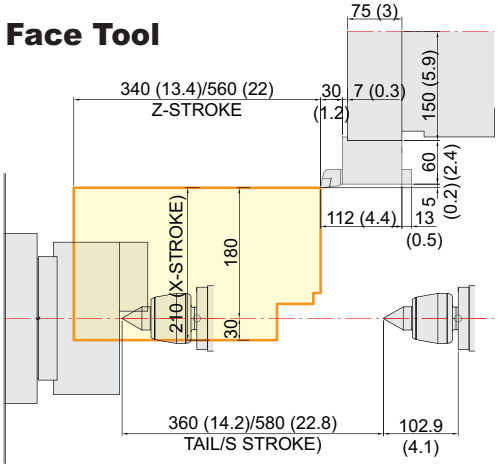

ITEM	A	B	C
SE2200MA	309 (12.2)	31 (1.2)	32.5 (1.3)
SE2200LMA	529 (20.8)		
SE2200M	288 (11.3)	52 (2)	39 (1.5)
SE2200LM	508 (20)		
SE2200LMC	499 (19.6)	61 (2.4)	43 (1.7)

SPECIFICATIONS

Tooling Travel Range (SE2200LMSA/LMS/LMSC)

unit : mm(in)

O.D Tool

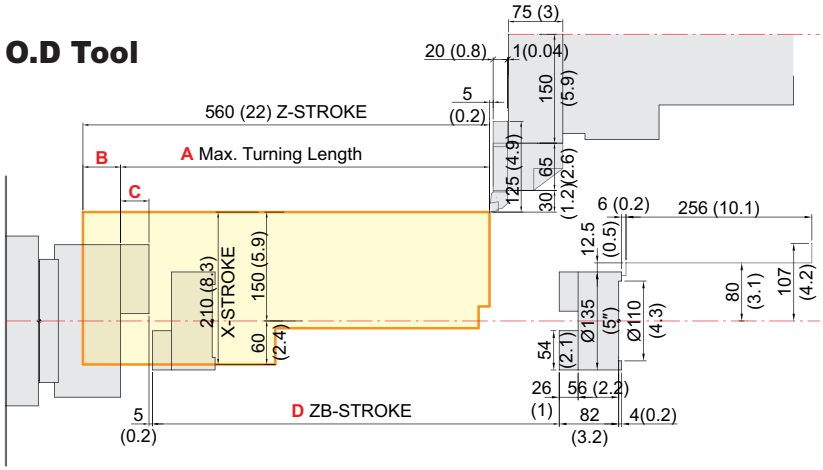

I.D Tool

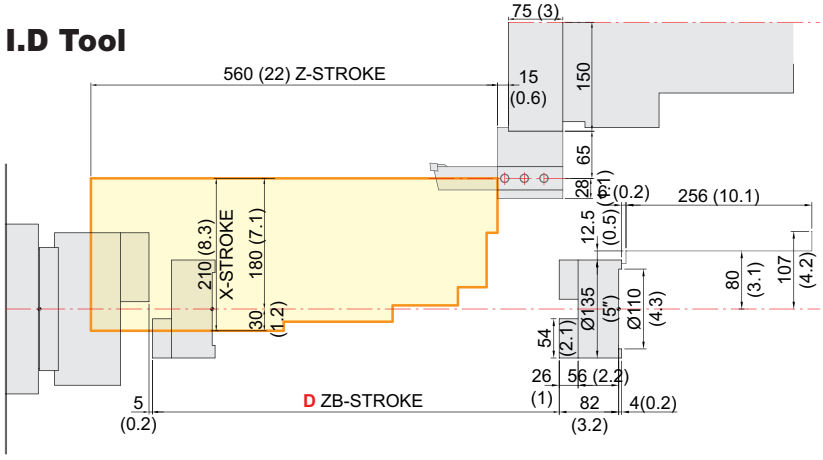

Face Tool

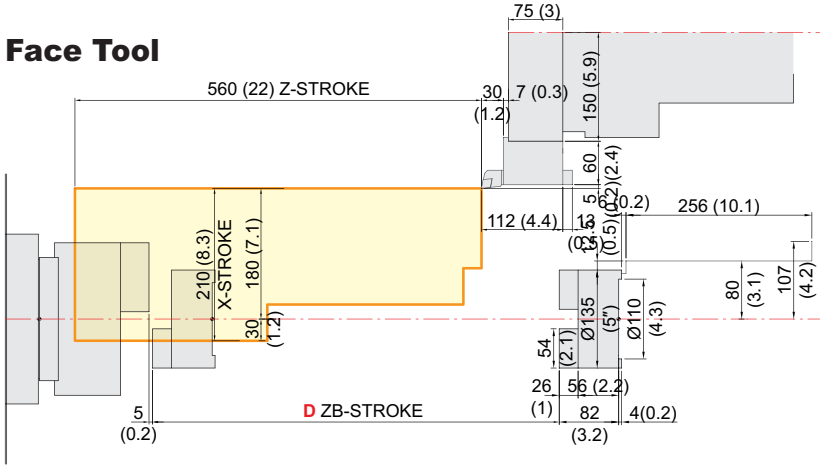

ITEM	A	B	C	D
SE2200LMSA	529 (20.8)	31 (1.2)	32.5 (1.3)	599.3 (23.6) [iTROL : 569.3 (22.4)]
SE2200LMS	508 (20)	52 (2)	39 (1.5)	560 (22) [iTROL : 530 (20.9)]
SE2200LMSC	499 (19.6)	61 (2.4)	43 (1.7)	547 (21.5) [iTROL : 517 (20.4)]

SPECIFICATIONS

Tooling Travel Range (SE2200LMSA/LMS/LMSC)

unit : mm(in)

Axial driven

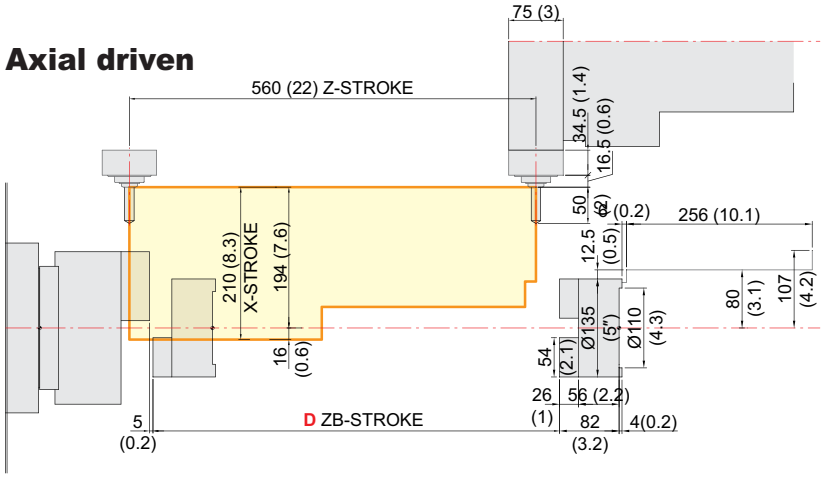

Angular driven

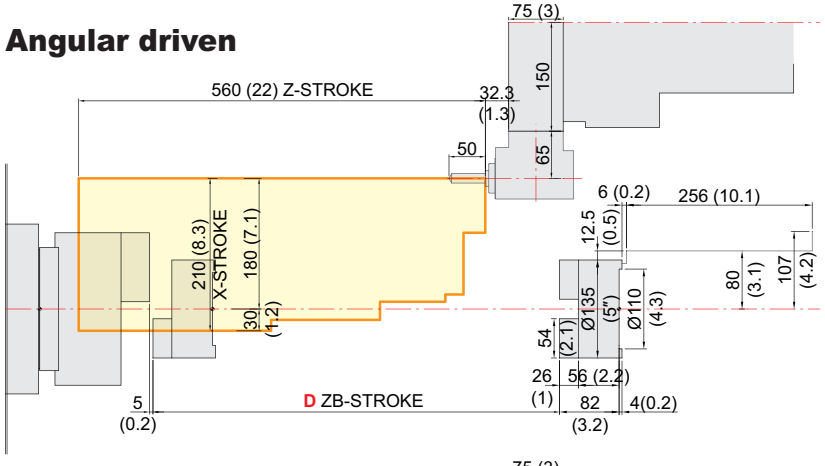

Sub Angular driven

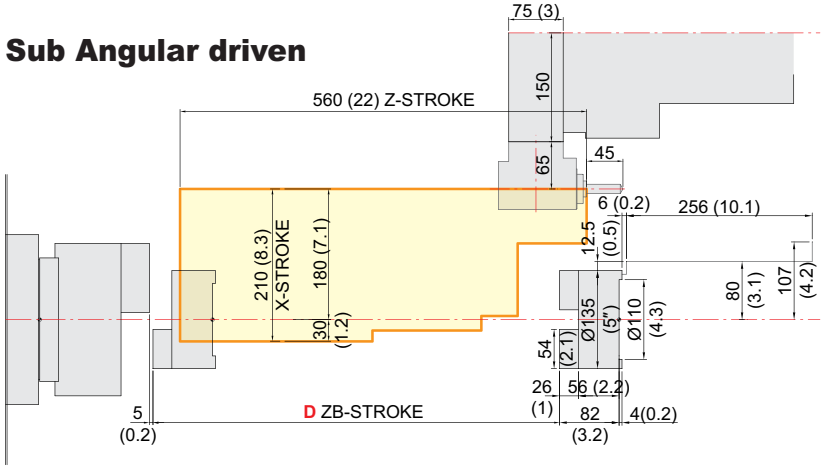

ITEM	A	B	C	D
SE2200LMSA	529 (20.8)	31 (1.2)	32.5 (1.3)	599.3 (23.6) [iTROL : 569.3 (22.4)]
SE2200LMS	508 (20)	52 (2)	39 (1.5)	560 (22) [iTROL : 530 (20.9)]
SE2200LMSC	499 (19.6)	61 (2.4)	43 (1.7)	547 (21.5) [iTROL : 517 (20.4)]

SPECIFICATIONS

Specifications

[ ] : Option

ITEM				SE2200A	SE2200LA	SE2200MA	SE2200LMA	SE2200LMSA
CAPACITY	Max. Swing		mm(in)	Ø600 (Ø23.6″)				
	Swing Over the Carriage		mm(in)	Ø390 (Ø15.4″)				
	Max. Turning Dia.		mm(in)	Ø350 (Ø13.8″)		Ø300 (Ø11.8″)		
	Max. Turning Length		mm(in)	340 (13.4″)	560 (22″)	309 (12.2″)	529 (20.8″)	
	Bar Capacity	Main	mm(in)	Ø51 (Ø2″)				
		Sub	mm(in)	-				Ø32 (Ø1.3″)
SPINDLE	Chuck Size	Main	inch	6″				
		Sub	inch	-				5″
	Spindle Bore	Main	mm(in)	Ø60 (Ø2.4″)				
		Sub	mm(in)	-				Ø42 (Ø1.7″)
	Spindle Speed (rpm)	Main	r/min	6,000				
		Sub	r/min	-				6,000
	Motor (Max./Cont.)	Main	kW(HP)	15/11 (20/15) [13.5/9 (18/12)]				
		Sub	kW(HP)	-				7.5/3.7 (10/5) [7.4/4.9 (93.9/6.6)]
	Torque (Max./Cont.)	Main	N·m(lbf·ft)	127/70 (93.7/51.6) [114.5/76.4 (84.5/56.3)]				
		Sub	N·m(lbf·ft)	-				63.6/23.6 (46.9/17.4) [47/31.1 (34.7/22.9)]
	Spindle Nose	Main	-	A2-5				
		Sub	mm(in)	-				FLAT TYPE
	Spindle Type	Main	-	BELT				
		Sub	-	-				BELT
	C-axis Indexing		deg	-		0.001°		
FEED	Travel	X/Z	mm(in)	210/340 (8.3″/13.4″)	210/560 (8.3″/22″)	210/340 (8.3″/13.4″)	210/560 (8.3″/22″)	
		ZB	mm(in)	-				599.3 (23.6″) [569.3 (22.4″)]
	Rapid Traverse Rate	X/Z	m/min(ipm)	30/36 (1,181/1,417)				
		ZB	m/min(ipm)	-				15 (591)
	Slide Type		-	ROLLER LM GUIDE				
TURRET	No. of Tools		ea	12″		12 [24]		
	Tool Size	O.D/I.D	mm(in)	□25/Ø40 (□1″/Ø1 1/2″)		□20/Ø32 (□3/4″/Ø1 1/4″)		
	Indexing Time		sec/step	0.15				
LIVE TOOL	Milling Tool Speed (rpm)		r/min	-		6,000		
	Motor (Max./Cont.)		kW(HP)	-		3.85/2.59 (5.16/3.47) [Cont. : 2.8 (3.8)]		
	Torque (Max./Cont.)		N·m(lbf·ft)	-		36.7/18.5 (27.1/13.6) [Cont. : 27 (19.9)]		
	Collet Size		mm(in)	-		ER20 / Ø13 (Ø0.5″)		
	Type		-	-		BMT45		
TAIL STOCK	Taper		-	MT#4				-
	Quill Dia.		mm(in)	Ø56 (Ø2.2″)				-
	Travel		mm(in)	360 (14.2″)	580 (22.8″)	360 (14.2″)	580 (22.8″)	-
TANK CAPACITY	Coolant Tank		ℓ(gal)	150 (39.6)	200 (52.8)	150 (39.6)	200 (52.8)	
	Lubricating Tank		ℓ(gal)	0.7 (0.18)				
POWER SUPPLY	Electric Power Supply		kVA	18				23
	Thickness of Power Cable		Sq	Over 16				
	Voltage		V/Hz	220V, 50/60Hz				
MACHINE	Floor Space (L×W)		mm(in)	2,120×1,610 (83.5″×63.4″)	2,970×1,610 (116.9″×63.4″)	2,150×1,610 (84.6″×63.4″)	2,970×1,610 (116.9″×63.4″)	
	Height		mm(in)	1,700 (66.9″)				
	Weight		kg(lb)	3,100 (6,834)	3,500 (7,716)	3,150 (6,945)	3,550 (7,826)	3,650 (8,047)
CNC	Controller		-	HYUNDAI WIA FANUC - SMART PLUS [HYUNDAI-iTROL]				

Specifications are subject to change without notice for improvement.

CONTROLLER

Specifications

[ ] : Option

ITEM				SE2200	SE2200L	SE2200M	SE2200LM	SE2200LMS
CAPACITY	Max. Swing		mm(in)	Ø600 (Ø23.6″)				
	Swing Over the Carriage		mm(in)	Ø390 (Ø15.4″)				
	Max. Turning Dia.		mm(in)	Ø350 (Ø13.8″)		Ø300 (Ø11.8″)		
	Max. Turning Length		mm(in)	307 (12.1″)	558 (22″)	288 (11.3″)	508 (20″)	
	Bar Capacity	Main	mm(in)	Ø65 (Ø2.6″)				
		Sub	mm(in)	–				Ø32 (Ø1.3″)
SPINDLE	Chuck Size	Main	inch	8″				
		Sub	inch	–				5″
	Spindle Bore	Main	mm(in)	Ø75 (Ø3″)				
		Sub	mm(in)	–				Ø42 (Ø1.7″)
	Spindle Speed (rpm)	Main	r/min	4,500				
		Sub	r/min	–				6,000
	Motor (Max./Cont.)	Main	kW(HP)	15/11 (20/15) [13.5/9 (18/12)]				
		Sub	kW(HP)	–				7.5/3.7 (10/5) [7.4/4.9 (93.9/6.6)]
	Torque (Max./Cont.)	Main	N·m(lbf·ft)	167/92 (123.2/67.9) [150.3/100 (110.9/73.8)]				
		Sub	N·m(lbf·ft)	–				63.6/23.6 (46.9/17.4) [47/31.1 (34.7/22.9)]
	Spindle Nose	Main	-	A2-6				
		Sub	mm(in)	–				FLAT TYPE
	Spindle Type	Main	-	BELT				
		Sub	-	–				BELT
	C-axis Indexing		deg	–		0.001°		
FEED	Travel	X/Z	mm(in)	210/340 (8.3″/13.4″)	210/560 (8.3″/22″)	210/340 (8.3″/13.4″)	210/560 (8.3″/22″)	
		ZB	mm(in)	–				560 (22″) [530 (20.9″)]
	Rapid Traverse Rate	X/Z	m/min(ipm)	30/36 (1,181/1,417)				
		ZB	m/min(ipm)	–				15 (591)
	Slide Type		-	ROLLER LM GUIDE				
TURRET	No. of Tools		ea	12		12 [24]		
	Tool Size	O.D/I.D	mm(in)	□25/Ø40 (□1″/Ø1 1/2″)		□20/Ø32 (□3/4″/Ø1 1/4″)		
	Indexing Time		sec/step	0.15				
LIVE TOOL	Milling Tool Speed (rpm)		r/min	–		6,000		
	Motor (Max./Cont.)		kW(HP)	–		3.85/2.59 (5.16/3.47) [Cont. : 2.8 (3.8)]		
	Torque (Max./Cont.)		N·m(lbf·ft)	–		36.7/18.5 (27.1/13.6) [Cont. : 27 (19.9)]		
	Collet Size		mm(in)	–		ER20 / Ø13 (Ø0.5″)		
	Type		-	–		BMT45		
TAIL STOCK	Taper		-	MT#4				–
	Quill Dia.		mm(in)	Ø56 (Ø2.2″)				–
	Travel		mm(in)	360 (14.2″)	580 (22.8″)	360 (14.2″)	580 (22.8″)	–
TANK CAPACITY	Coolant Tank		ℓ(gal)	150 (39.6)	200 (52.8)	150 (39.6)	200 (52.8)	
	Lubricating Tank		ℓ(gal)	0.7 (0.18)				
POWER SUPPLY	Electric Power Supply		kVA	18				23
	Thickness of Power Cable		Sq	Over 16				
	Voltage		V/Hz	220V, 50/60Hz				
MACHINE	Floor Space (L×W)		mm(in)	2,190×1,610 (86.2″×63.4″)	2,970×1,610 (116.9″×63.4″)	2,220×1,610 (87.4″×63.4″)	2,970×1,610 (116.9″×63.4″)	
	Height		mm(in)	1,700 (66.9″)				
	Weight		kg(lb)	3,200 (7,055)	3,600 (7,937)	3,250 (7,165)	3,650 (8,047)	3,750 (8,267)
CNC	Controller		-	HYUNDAI WIA FANUC - SMART PLUS [HYUNDAI-iTROL]				

Specifications are subject to change without notice for improvement.

SPECIFICATIONS

Specifications

[ ] : Option

ITEM				SE2200LC	SE2200LMC	SE2200LMSC
CAPACITY	Max. Swing		mm(in)	Ø600 (Ø23.6″)		
	Swing Over the Carriage		mm(in)	Ø390 (Ø15.4″)		
	Max. Turning Dia.		mm(in)	Ø350 (Ø13.8″)	Ø300 (Ø11.8″)	
	Max. Turning Length		mm(in)	549 (21.6″)	499 (19.6″)	
	Bar Capacity	Main	mm(in)	Ø81 (Ø3.2″)		
		Sub	mm(in)	–		Ø32 (Ø1.3″)
SPINDLE	Chuck Size	Main	inch	10″		
		Sub	inch	–		5″
	Spindle Bore	Main	mm(in)	Ø91 (Ø3.6″)		
		Sub	mm(in)	–		Ø42 (Ø1.7″)
	Spindle Speed (rpm)	Main	r/min	3,500		
		Sub	r/min	–		6,000
	Motor (Max./Cont.)	Main	kW(HP)	18.5/11 (25/15) [Power Up : 18.5/15 (25/20)] [13.5/9 (18/12)]		
		Sub	kW(HP)	–		7.5/3.7 (10/5) [7.4/4.9 (93.9/6.6)]
	Torque (Max./Cont.)	Main	N·m(lbf·ft)	269/120 (198.4/88.5) [Power Up : 269/164 (198.4/121)] [197.6/132 (145.7/97.4)]		
		Sub	N·m(lbf·ft)	–		63.6/23.6 (46.9/17.4) [47/31.1 (34.7/22.9)]
	Spindle Nose	Main	-	A2-8		
		Sub	mm(in)	–		FLAT TYPE
	Spindle Type	Main	-	BELT		
		Sub	-	–		BELT
	C-axis Indexing		deg	–	0.001°	
FEED	Travel	X/Z	mm(in)	210/560 (8.3″/22″)		
		ZB	mm(in)	–		547 (21.5″) [517 (20.4″)]
	Rapid Traverse Rate	X/Z	m/min(ipm)	30/36 (1,181/1,417)		
		ZB	m/min(ipm)	–		15 (591)
	Slide Type		-	ROLLER LM GUIDE		
TURRET	No. of Tools		ea	12	12 [24]	
	Tool Size	O.D/I.D	mm(in)	□ 25/Ø40 (□ 1″/Ø1 1/2″)	□ 20/Ø32 (□ 3/4″/Ø1 1/4″)	
	Indexing Time		sec/step	0.15		
LIVE TOOL	Milling Tool Speed (rpm)		r/min	–	6,000	
	Motor (Max./Cont.)		kW(HP)	–	3.85/2.59 (5.16/3.47) [Cont. : 2.8 (3.8)]	
	Torque (Max./Cont.)		N·m(lbf·ft)	–	36.7/18.5 (27.1/13.6) [Cont. : 27 (19.9)]	
	Collet Size		mm(in)	–	ER20 / Ø13 (Ø0.5″)	
	Type		-	–	BMT45	
TAIL STOCK	Taper		-	MT#4		–
	Quill Dia.		mm(in)	Ø56 (Ø2.2″)		–
	Travel		mm(in)	580 (22.8″)		–
TANK CAPACITY	Coolant Tank		ℓ(gal)	200 (52.8)		
	Lubricating Tank		ℓ(gal)	0.7 (0.18)		
POWER SUPPLY	Electric Power Supply		kVA	18		23
	Thickness of Power Cable		Sq	Over 16		
	Voltage		V/Hz	220V, 50/60Hz		
MACHINE	Floor Space (L×W)		mm(in)	2,970×1,610 (116.9″×63.4″)		
	Height		mm(in)	1,700 (66.9″)		
	Weight		kg(lb)	3,700 (8,157)	3,750 (8,267)	3,850 (8,488)
CNC	Controller		-	HYUNDAI WIA FANUC i Series - Smart Plus [HYUNDAI-iTROL]		

Specifications are subject to change without notice for improvement.

CONTROLLER

HYUNDAI WIA FANUC i Series – Smart Plus

[ ] : Option

Controlled axis / Display / Accuracy Compensation	
Control axes	2 axes (X, Z) / 3 axes (X, Z, C) / 4 axes (X,Z,Y,C)
	5 axes (X, Z, B, C, A) / 6 axes (X, Z, Y, B, C, A)
	7 axes (X1/Z1, X2/Z2, B2, C1/C2)
Simultaneously controlled axes	2 axes [Max. 4 axes]
Designation of spindle axes	3 axes [Max. 4 axes]
Least setting Unit	X, Z, Y, B axes : 0.001 mm (0.0001 inch)
	C, A axes : 0.001 deg
Least input increment	X, Z, Y, B axes : 0.001 mm (0.0001 inch)
	C, A axes : 0.001 deg
Inch / Metric conversion	G20 / G21
High response vector control	
Interlock	All axes / Each axis
Machine lock	All axes
Backlash compensation	± 0~9999 pulses (exc.Rapid traverse / Cutting feed)
Position switch	
LCD / MDI	15 inch LCD unit (with Touch Panel)
Feedback	Absolute motor feedback
Stored stroke check 1	Over travel
Stored stroke check 2, 3	
PMC axis control	
Operation	
Automatic operation (Memory)	
MDI operation	
DNC operation	Needed DNC software / CF card
Program restart	
Wrong operation prevention	
Program check function	Dry run
Single block	
Search function	Program Number / Sequence Number
Interpolation functions	
Nano interpolation	
Positioning	G00
Linear interpolation	G01
Circular interpolation	G02, G03
Exact stop mode	Single : G09, Continuous : G61
Dwell	G04, 0 ~ 9999.9999 sec
Skip	G31
Reference position return	1st reference : G28, 2nd reference : G30
	Ref. position check : G27
Thread synchronous cutting	G33
Thread cutting retract	
Variable lead thread cutting	
Multi / Continuous threading	
Feed function / Acc. & Dec. control	
Manual feed	Rapid traverse
	Jog : 0~2,000 mm/min (79 ipm)
	Manual handle : x1, x10, x100 pulses
	Reference position return
Cutting Feed command	Direct input F code
Feedrate override	0 ~ 200% (10% Unit)
Rapid traverse override	1%, F25%, 50%, 100%
Override cancel	
Feed per minute	G98
Feed per revolution	G99
Look-ahead block	1 block
Program input	
Tape Code	EIA / ISO
Optional block skip	9 ea
Program stop / end	M00, M01 / M02, M30
Maximum command unit	± 999,999.999 mm (± 99,999.9999 inch)
Plane selection	X-Y : G17 / Z-X : G18 / Y-Z : G19
Workpiece coordinate system	G52, G53, 6 pairs (G54 ~ G59)
Manual absolute	Fixed ON
Programmable data input	G10
Sub program call	10 folds nested
Custom macro	#100 ~ #199, #500 ~ #999
G code system	A, B/C
Programmable mirror image	G51.1, G50.1
G code preventing buffering	G4.1
Direct drawing dimension program	Including Chamfering / Corner R
Conversational Program	SmartGuide-i

Program input	
Multiple repetitive cycles Ⅰ, Ⅱ	
Canned cycle for turning	
Auxiliary function / Spindle speed function	
Auxiliary function	M & 4 digit
Level-up M Code	High speed / Multi / Bypass M code
Spindle speed function	S & 5 digit , Binary output
Spindle override	0% ~ 150% (10% Unit)
Multi position spindle orientation	M19 (S##)
Rigid tapping	
Constant surface speed control	G96, G97
Tool function / Tool compensation	
Tool function	T & 2 digit + Offset 2 digit
Tool life management	
Tool offset pairs	128 pairs
Tool nose radius compensation	G40, G41, G42
Geometry / Wear compensation	
Direct input of offset measured B	
Editing function	
Part program storage size	5,120m (2MB)
No. of registerable programs	1,000 ea
Program protect	
Background editing	
Extended part program editing	Copy, move and change of NC program
Memory card program edit	
Data input / output & Interface	
I/O interface	CF card, USB memory
	Embedded Ethernet interface
Screen hard copy	
External message	
External key input	
External workpiece number search	
Automatic data backup	
Setting, display and diagnosis	
Self-diagnosis function	
History display & Operation	Alarm & Operator message & Operation
Run hour / Parts count display	
Maintenance information	
Actual cutting feedrate display	
Display of spindle speed / T code	
Graphic display	
Operating monitor screen	Spindle / Servo load etc.
Power consumption monitoring	Spindle & Servo
Spindle / Servo setting screen	
Multi language display	Support 24 languages
Display language switching	Selection of 5 optional Languages
LCD Screen Saver	Screen saver
Unexpected disturbance torque	BST (Back spin torque limit)
Function for machine type	
Cs contour control (C & A axes)	Mill, MS, Y, SY, LF-Mill, TTMS, TTSY
Polar coordinate interpolation	Mill, MS, Y, SY, LF-Mill, TTMS, TTSY
Cylindrical interpolation	Mill, MS, Y, SY, LF-Mill, TTMS, TTSY
Polygon turning (2 Spindles)	Mill, MS, Y, SY, LF-Mill, TTMS, TTSY
Canned cycle for drilling	Mill, MS, Y, SY, LF-Mill, TTMS, TTSY
Spindle orientation expansion	MS, SY TTS, TTMS, TTSY
Spindle synchronous control	MS, SY TTS, TTMS, TTSY
Torque control	MS, SY TTS, TTMS, TTSY
Y axis offset	Y, SY, TTSY
Arbitrary angular control	Y, SY, TTSY
Composite / Superimposed control	MS, SY, TTS, TTMS, TTSY
Balance cutting	TTS, TTMS, TTSY

Option	
Fast ethernet	Needed option board
Data server	Needed option board
Protection of data at 8 levels	
Tool offset pairs	200 pairs
Helical interpolation	
Optional block skip	40 ea, 200 ea (AICC Ⅱ)

Figures in inch are converted from metric values.
The FANUC controller specifications are subject to change based on the policy of company CNC supplying.

CONTROLLER

HYUNDAI-iTROL (SIEMENS 828D)

[ ] : Option ☆ Needed technical consultation

Controlled axis / Display / Accuracy Compensation	
Control axes	2 axes (X, Z) - Std.
	3 axes (X, Z, C) - Mill
	4 axes (X, Z, Y, C) - Y
	5 axes (X, Z, B, C, A) - MS
	6 axes (X, Z, Y, B, C, A) - SY
Simultaneously controlled axes	Max. 4 axes
Least setting Unit	X, Z, Y, B axes : 0.001 mm (0.0001 inch)
	C, A axes : 1 deg [0.001] deg
Least input increment	X, Z, Y, B axes : 0.001 mm (0.0001 inch)
	C, A axes : 1 deg [0.001] deg
Inch / Metric changeover	G70 (inch) / G71 (metric)
Interlock	All axes / Each axis
Backlash compensation	
Pitch error compensation	Leadscrew pitch errror compensation
LCD / MDI	15 inch color LCD (With Touch panel)
Keyboard	QWERTY full keyboard
Stored stroke check	Over travel
Operation	
Automatic operation	
MDI operation	
Program restart	
Program check function	Dry run / Program check / Machine lock
Single block	
Block search	Block search
Reposition	
Working area limit	Working area limitations
Interpolation functions	
Positioning	G00
Linear interpolation	G01
Circular interpolation	Circular interpolation CW (G02)
	Circular interpolation CCW (G03)
Exact position stop	Single block exact stop (G09)
	Exact stop G60 (G601, G602, G603)
Dwell	Dwell (G04)
Reference position return	Return to reference point
	Return to 2nd reference point
Helical interpolation	
Thread synchronous cutting	
Thread cutting retract	
Spline interpolation	Non-uniform rational B splines
Feed function / Acc. & Dec. control	
Manual feed	Rapid traverse
	Jog
	Manual handle
	Reference position return
Cutting Feed command	Direct input F code
Feedrate override	0 ~ 200% (10% Unit)
Rapid traverse override	1%, 25%, 50%, 100%
Feed per minute	G94
Feed per revolution	G95
Look-ahead block	1 block
Program input	
ISO support	G291(ISO)/G290 (SIEMENS)
	(ISO G Code system-A)
Optional block skip	2
Program stop / end	M00, M01 / M02, M30
Maximum command unit	± 999,999.999 mm, ± 99,999.9999 inch
Plane selection	X-Y : G17, X-Z : G18, Y-Z : G19
Workpiece coordinate system	G54 ~ G57, G505~G549
	G500 (Basic frame - setable zero offset)
	G53 (Work offset non modal)
	G153 (basic frame non modal)
Sub program call	11 folds nested
G code preventing buffering	STOPRE
Turning Cycle	Turning programing (Cycle 93 ,94, 95, 97)
User Cycle	

Auxiliary function / Spindle speed function	
Auxiliary function	M Code 4 digit
Spindle speed function	S Code 5 digit
Spindle override	0% ~ 150% (10% Unit)
Spindle orientation	SPOS
Rigid tapping	
Autometic mode interchange	Spindle / Axis mode
Constant surface speed control	G96, G97
Spindle speed limitation	LIMS
Tool function / Tool compensation	
Tool function	Tool number & Tool name
	Tool : T + Offset : D
Tool life management	
Tools in tool list	128 ea : Std.
	256 ea : Mill
	768 ea : Y, MS, SY
Cutting Edges in tool list	256 ea : Std.
	512 ea : Mill
	1,536 ea : Y, MS, SY
Tool nose radius compensation	ISO (G40, G41, G42)
Geometry / Wear compensation	
Measurement of tool length	
Tool management function	
Editing function	
Part program storage size	3MB - Std.
	5MB - Mill
	10MB - Y, MS, SY
No. of registerable programs	750 ea
External Strorage devices	Local network, Server, USB, Flash drive
Background editing	
Extended part program editing	Copy, move and change of NC program
Memory card program edit	
Data input / output & Interface	
I/O interface	CF card interface (ONLY 10.4")
	USB memory interface
	Embedded Ethernet memory interface
Screenshot	
Setting, display and diagnosis	
Self-diagnosis function	
History display & Operation	Alarm & Operator message & Operation
Run hour / Parts count display	
Maintenance information	
Actual cutting feedrate display	
Display of spindle speed / T code	
Graphic display	
Operating monitor screen	Spindle / Servo load etc.
Multi language display	Support 9 languages Chinese (Simplified/Traditional), English, French, German, Italian, Korean, Portuguese, Spanish
	[☆ Support 22 languages : Inquiry need]
LCD Screen Saver	Screen saver & Motion sensing
Function for machine type	
Cs contour control (C & A axes)	Mill, MS, Y, SY model
Polar coordinate interpolation	Mill, MS, Y, SY model
Cylindrical interpolation	Mill, MS, Y, SY model
Canned cycle for drilling	Mill, MS, Y, SY model
[Polygon turning (CP-Basic)]	Mill, MS, Y, SY model
[Hobbing / Skybing (CP-Comfort)]	Mill, MS, Y, SY model
Spindle synchronous control	MS, SY model
Servo tailstock function	MS, SY model

Option	
Additional optional block skip	10
Contour handwheel	
3D simulation	
Real time simulation	
Shop Turn	Machining step programming for turning

HW-MMS

HYUNDAI WIA Machine Monitoring System

A manufacturing machine self-developed by Hyundai Wia, HW-MMS is a unique software capable of monitoring the operation status of manufacturing machines in factories, a smart solution to improve manufacturing conditions of customers

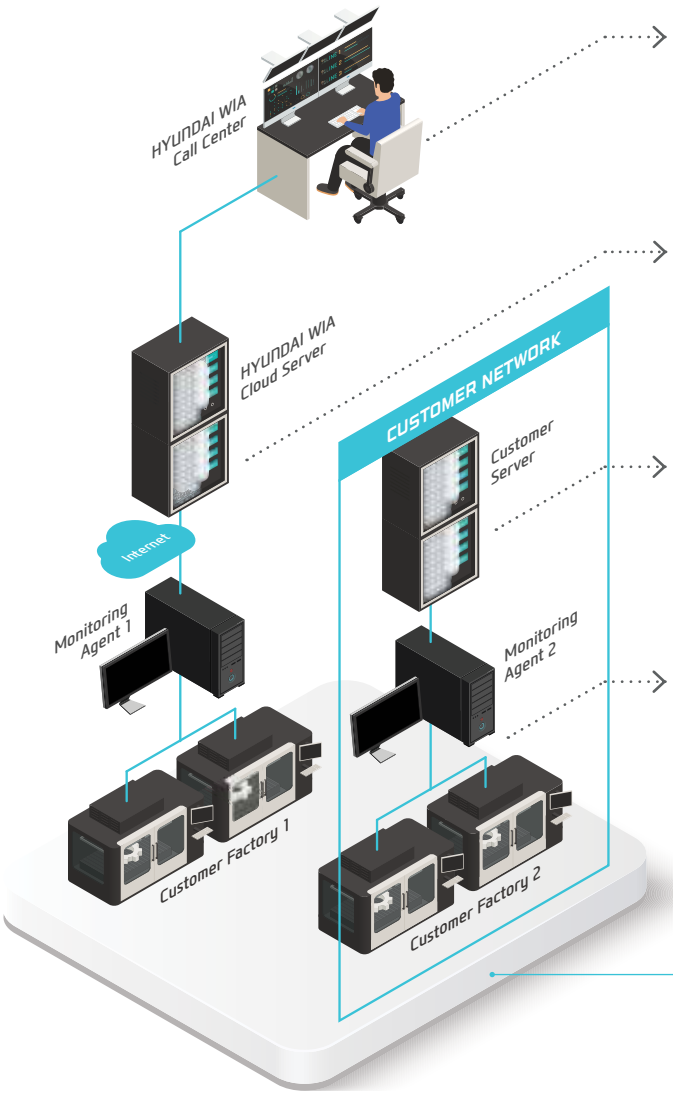

HW-MMS Remote

Hyundai Wia Call Center's remote diagnosis service provides a HMI/video diagnostic function.

HW-MMS Cloud

A cloud server-based equipment monitoring system for collecting and analyzing facility operation data.

HW-MMS Edge

A client server-based tool monitoring system for collection/analysis of facility operation data. (Compatible with client MES / ERP interface)

HW-MMS Edge Plus

This is a facility big data-based smart factory solution that collects and analyzes spindle/feed data, tool lifespan, NC processing files, etc. in real time

HYUNDAI WIA
Smart Factory Solution

HYUNDAI WIA

YouTube HYUNDAI WIA MT
www.youtube.com/HYUNDAIWIAMT

EXPERIENCE THE NEW TECHNOLOGY

With its top-quality HYUNDAI WIA machine tool creates a new and better world.

http://machine.hyundai-wia.com
HYUNDAI WIA Machine Tools
Global Links

HEADQUARTER

Changwon Technical Center/R&D Center/Factory 153, Jeongdong-ro, Seongsan-gu, Changwon-si, Gyeongsangnam-do, Korea **TEL** : +82 55 280 9114 **FAX** : +82 55 282 9114

Overseas Sales Team /R&D Center 37, Cheoldobangmulgwan-ro, Uiwang-si, Gyeonggi-do, Korea **TEL** : +82 31 8090 2539

OVERSEAS OFFICES

HYUNDAI WIA Machine America corp. 450 Commerce Blvd, Carlstadt, NJ 07072, USA **TEL** : +1-201-987-7298

HYUNDAI WIA Europe GmbH Alexander-Fleming-Ring 57, 65428 Rüsselsheim Germany **TEL** : +49-0-6142-9256-0

HYUNDAI WIA Machine Tools China 2-3F, Bldg6, No.1535 Hongmei Road, Xuhui District, Shanghai, China **TEL** : +86-21-6427-9885

India Branch Office #4/169, 1st Floor, LOTTE BLDG, Rajiv Gandhi Salai, (OMR), Kandanchavadi, Chennai - 600096, Tamilnadu, India **TEL** : +91-76-0490-3348

Vietnam Branch Office Flat number 05, Service and Trade Center of Viet Huong Industrial Zone, Highway 13, Thuan Giao , Thuan An, Binh Duong, Vietnam **TEL** : +84-3-5399-5099

2021-06 002.008 ENG